ISSN: 2664-9640

Circuit Board Insulation Resistance Detection System in Accelerated Aging Experiment

Hongjie Zhu, Ruohai Di, Zhigang Lv, Yubing Sun and Jie Feng

School of Electronics and Information Engineering, Xi'an Technological University, Xi'an 710021, China

Abstract

Electrochemical migration failure of high-density circuit boards will affect the reliability of circuit boards, and the change of insulation resistance is an important indicator to characterize electrochemical migration. In order to reduce the loss caused by the reduction of the insulation of the electrical equipment, a safety protection system is designed to monitor the resistance value of the insulation resistance in real time. The system consists of insulation resistance detection system, IPC-B-25A tested insulation resistance board, program-controlled constant temperature and humidity test box, and host computer software. The insulation resistance detection system takes the STM32 processor as the core, uses the internal analog-to-digital convert to complete the real-time detection of the insulation resistance, and expands the PCF8563 clock chip to record the aging time information. When the insulation resistance drops to the threshold, the sound and light alarm happens. And the system has good reliability and practicability, and has been successfully applied in the accelerated aging test of a circuit board.

Keywords

Insulation resistance, STM32 microcontroller, Light alarm.

1. Introduction

After the epidemic eased in 2020, people respond the national call of "avoid gathering in public places and reduce going out", being eager to ensure immediate access to vegetables, fruits, food, personal protection and safety. Therefore, in order to ensure the safety and necessity of people's purchase, the government call for "not necessary, don't go out" measures. However, because of the supermarket's cumbersome purchase process, time-consuming and queuing payment model, they cannot avoid the contact among people. There exist serious security risks when consumers go out to buy vegetables.

Therefore, unmanned vending container of epidemic prevention in community, integrating 4G communication, monitoring, control, and display functions, was designed in this paper, which can realize intelligent weighing and information transmission, including super multimedia, interactive experience, real-time monitoring of temperature, humidity, sales data, machine status, out of stock situation and remote feedback. The design greatly improves the safety of personal protection for purchasing fruits and vegetables and realizes an intelligent life.

2. System Working Principle

The whole system is mainly composed of testing device, tested circuit board, constant temperature and humidity test box and computer application.

The tested circuit board is placed in the controllable temperature and humidity test box. By changing the temperature and humidity setting value of the test box, the resistance value and time change of the insulation resistance are detected in real time through the detection system and uploaded to the PC terminal. Finally, the insulation resistance with a measured

resistance value of 104-109 can be realized. And the measured resistance value and time can be displayed and stored through numerical quantification. It mainly realizes the first display alarm when the resistance value is less than 106 and displays the currently measured resistance value on the display screen. When the resistance value continues to display at 104-105 for the second time, the alarm will be displayed and the current measured value will be displayed on the display screen, and then the system will stop working. The working principle of the system is shown in Figure 1.

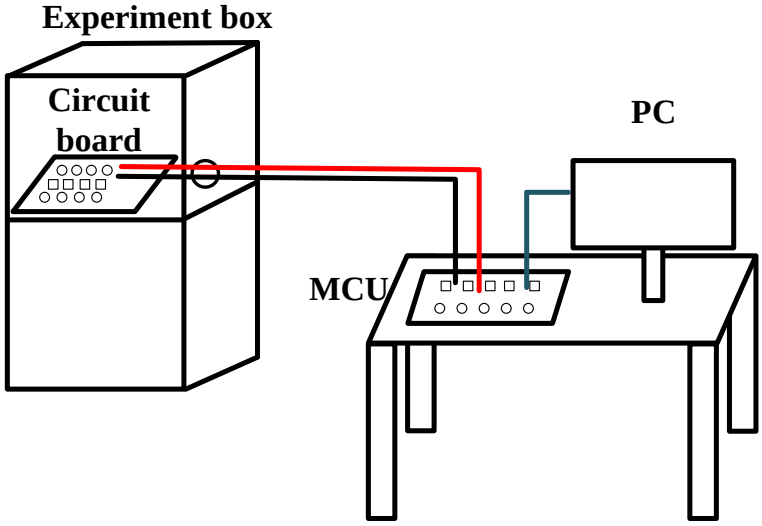

Figure 1: System working principle diagram

3. Hardware Design

The hardware consists of central processing unit module, analog to digital converter acquisition module, DC-DC converter high voltage generation module, insulation resistance measurement module, clock module, insulation resistance test board, sound and light alarm module, data storage module and display module. The hardware block diagram is shown in Figure 2.

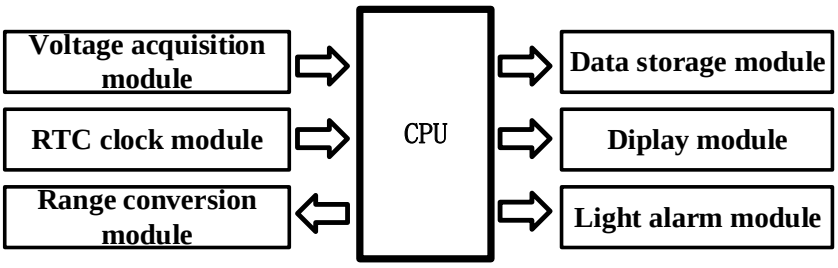

Figure 2: Hardware block diagram

3.1. Central processing unit module

STM32F103RC is used as the CPU module of the whole system for detecting the resistance value of insulation resistance. The CPU has superior performance in memory and memory management, low power consumption (low power consumption), and its own analog-to-digital conversion function makes it easy to use and easy to debug. It is characterized by low power consumption, easy development, high performance and low cost.

3.2. DC-DC high voltage generation module

Insulation resistance is the resistance under specified high voltage conditions. The measurement of insulation resistance is usually tested under the condition that 500V is applied across the insulation resistance under test. The DC-DC high voltage generation module of this system uses the pulse width modulation technology to convert the 12V DC

voltage into the specified 500V high voltage, which has the advantages of small output voltage ripple and high stability. The module is equipped with overvoltage and overcurrent protection function, which makes the system work more stable and reliable.

3.3. Insulation resistance measurement circuit design

The measurement of insulation resistance is realized by the principle of resistance division. Connect the insulation resistance to be measured and the divider resistance in series with a high-voltage circuit with a voltage of 500V, and then calculate the insulation resistance by measuring the voltage of the divider resistance. The calculation method of resistance Rx is shown in Equation 1.

$$Rx = \frac{UV}{\Delta u * ad} * Rs - Rs$$

Equation 1: Resistance Rx calculation method

In the formula, Rx is the measured insulation resistance value, HV is the 500V high voltage voltage value, Voltage difference is the analog-to-digital convert voltage conversion resolution, ad is the analog-to-digital convert conversion binary code collected by the MCU, and Rs is the voltage dividing resistance value. The work flow is as follows: high voltage HV is applied to both ends of the circuit composed of the measured insulation resistance and the voltage divider resistance in series, the analog-to-digital convert chip collects the divided sampling voltage ad and sends it to the MCU, and then calculates the measured insulation resistance. Resistance Rx. Its principle block diagram is shown in Figure 3.

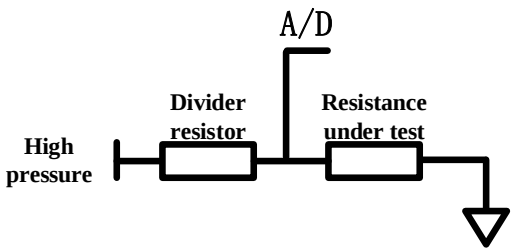

Figure 3: Resistance measurement schematic

3.4. Automatic range conversion circuit

The measurement range of insulation resistance is generally in the range of tens of kiloohms to several gigaohms, which leads to a large dynamic range of the sampling voltage generated by the voltage divider resistor in series with it, and it is difficult to match the voltage input of the analog-to-digital convert conversion circuit. Require. Therefore, the system designs a range automatic conversion circuit to realize the automatic switching of the voltage divider resistance range to meet the input requirements of the analog-to-digital convert conversion circuit. Its circuit schematic diagram is shown in Figure 4.

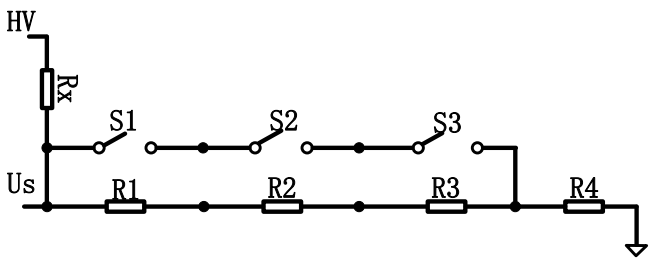

Figure 4: Range conversion circuit

3.5. External clock module

The time detection of this system is provided by the external clock PCF8563, which is a CMOS real-time clock/calendar optimized for low power consumption. Programmable clock output,

ISSN: 2664-9640

interrupt output, and low-voltage detector are provided. All addresses and data are serially transmitted over two bidirectional IIC buses. The maximum bus speed is 400kbits/s. The built-in word address register automatically increments after each write or read data byte. The PCF8563 is shown in Figure 5.

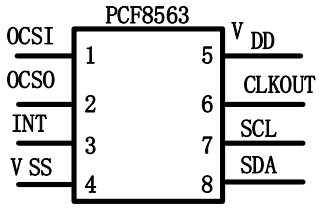

Figure 5: The chip of PCF8563

3.6. IPC—B-25A tested insulation resistance board

The tested insulation resistance adopts IPC_B_25A standard insulation test board. The tested insulation resistance board is placed in a programmable constant temperature and humidity test box. By changing the value of temperature and humidity, the tested insulation resistance is decreased, so as to detect the decrease of insulation resistance. time and resistance.

3.7. Data storage module

The host adopts AT24CL64 chip to form a data storage module, which is used to store the detected resistance value and time information.

AT24CL64 is a power-down storable EEPROM memory based on I2C bus, its capacity is 8K bytes, and the power-down data is stored for 38 years. Two-wire serial interface, the bus frequency can reach 1MHZ. The AT24CL64 is shown in Figure 6.

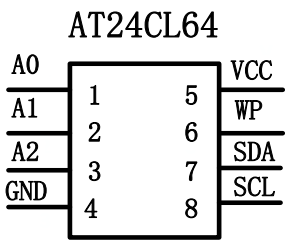

Figure 6: The chip of AT24CL64

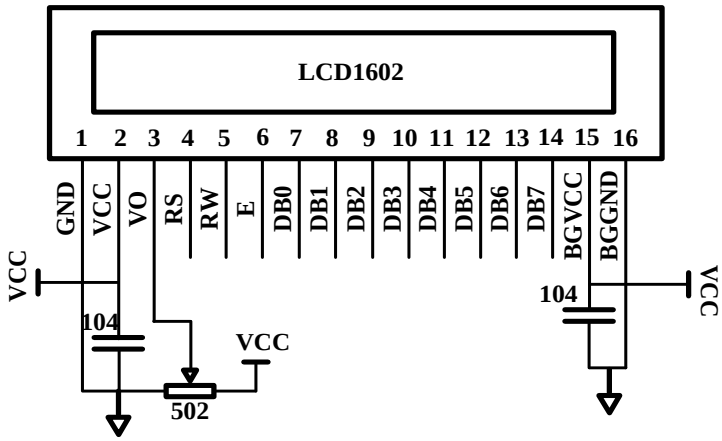

Figure 7: LCD Module

ISSN: 2664-9640

3.8. LCD Module

The system uses LCD1602 liquid crystal as the local data display module, and displays the detected insulation resistance and aging time in real time. The LCD liquid crystal module adopts the method of dynamic refresh to cyclically display the real-time data of each parameter. The LCD1602 is shown in figure7.

3.9. Light Alarm Module

When the host finds that the operating parameters of a slave are out of the normal range, it needs to prompt and alarm. This module is mainly composed of light-emitting diodes and buzzers. When the IO port BUZZ and the LED output are at high level, the triode is turned on, the light-emitting diode and the buzzer have current flowing, and the buzzer emits a crisp beep; the LED light is lit to realize sound and light alarm. The light alarm principle is shown in Figure 8.

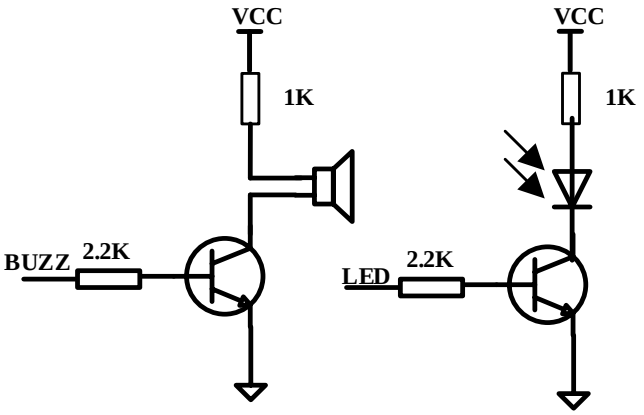

Figure 8: Light alarm principle diagram

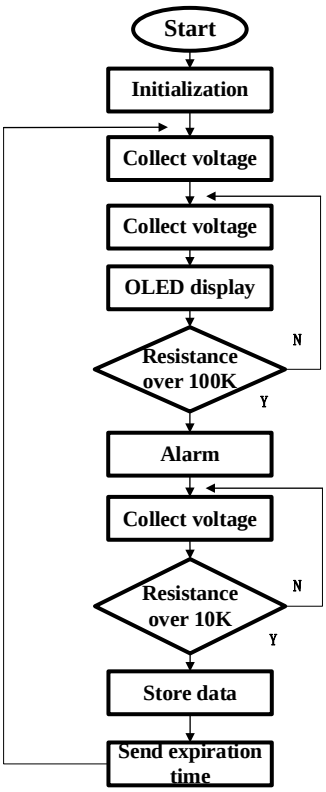

Figure 9: The flow chart of the lower computer software

ISSN: 2664-9640

4. Software Design

4.1. Software of lower computer

The lower computer program is divided into the host program and the slave program, all of which use the C programming language to realize the modular design. Compile and debug in the Keil5 environment, and use interrupts, sub-functions, STM32 function libraries, etc. to complete the program writing. The main flowchart is shown in Figure 9.

4.2. Computer application

Using the Qt Creator 4.9.1 development tool, the host computer software based on serial communication is written, which is used to display the real-time detected insulation resistance value and time information on the computer. At the same time, by establishing the corresponding database, the real-time data received Preservation and other secondary development and utilization. The data display interface of the host computer is shown in Figure 10.

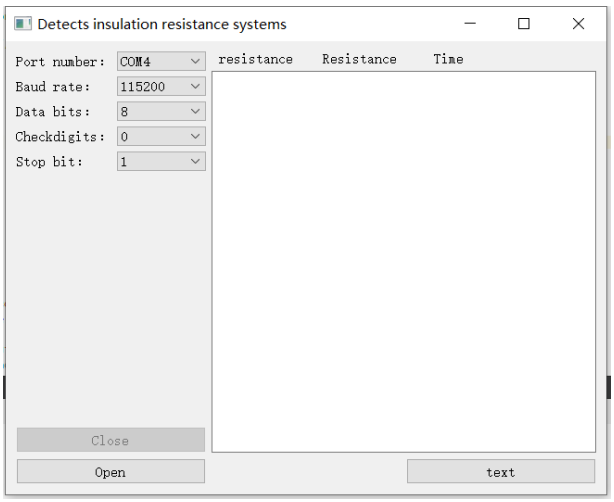

Figure 10: The interface of computer application

5. Conclusion

The "insulation resistance detection system" described in this article, the problem is raised in the use of electrical equipment due to the objective environment causes aging and wear of the equipment, once an accident occurs, it will cause unimaginable consequences. Research how to test the insulation resistance of electrical equipment, so as to grasp the insulation performance of the equipment in time, and realize the prevention and prevention of danger. The whole system detects insulation resistance and time to improve the safe use of electrical equipment in an objective environment. It has sufficient application prospects in insulation resistance detection.

Acknowledgements

This work is supported by Fund Project (80902010302).

References

[1] Y.B. Li, J.Y. Sun, Q. Zhong, H.R. Zhou. Circuit Design for Automatic Measurement of Sonar Transducer Insulation Resistance. Ship Electronics Engineering, vol. 35 (2015) No. 10: p.185-188.

[2] L. Feng. Research on Insulation Resistance and Equivalent Capacitance Intelligent Detector of Multi-channel Sonar Transducer. China Ship Repair, vol. 22 (2009) No. 06: p.33-35.

[3] Y. Gao. Analysis and optimization of insulation resistance detection methods for electric vehicles. Physical and Chemical Inspection, vol. 57 (2021) No. 05: p.27-30.

[4] S.H. Wang. Insulation resistance measurement technology. Modern Building Electric, vol. 2 (2011) No. 05: p.55-56.