ISSN: 2664-9640

Bolt Anchor Cable Cooperative Support Technology for Roadway Excavation along Goaf in Inclined Thick Coal Seam

Zhe Zhang[1, a], Jufeng Zhang[2, b], Wenzhong Li[1] and Tianhui Hu[1]

[1] Weijiadi Coal Mine, Gansu Jingyuan Coal Power Co., Ltd, Baiyin 730913, China;

[2] School of Energy Engineering, Longdong University, Qingyang 745000, China.

[a] 422622510@qq.com, [b] Jufeng6100229@126.com

Abstract

In view of the problems of low efficiency of traditional roadway support, serious roadway deformation and difficult control of surrounding rock during roadway excavation along the goaf in inclined thick coal seam of Weijiadi coal mine, taking the roadway excavation along the goaf in large section transportation roadway of 2303 working face as the background, the collaborative support technology of high resistance yield pressure support, prestressed short anchor cable support and prestressed long anchor cable reinforcement support is proposed by using the combination of theoretical analysis, numerical analysis and field practice. The research results show that through the implementation of bolt anchor cable cooperative support technology, the roof subsidence of 2303 transportation roadway is reduced by 11.3%, and the movement of two sides is reduced by 48.4%. The bolt anchor cable cooperative support technology effectively controls the deformation of roadway surrounding rock.

Keywords

Inclined thick coal seam, driving roadway along goaf, anchor bolt and anchor cable, cooperative support, surrounding rock control.

1. Introduction

Pillar free roadway protection mining technology is an advanced underground mining technology, including roadway excavation along the goaf and roadway retention along the goaf [1]. According to different technical measures, roadway excavation along the goaf can be divided into complete roadway excavation along the goaf, roadway excavation with small coal pillar and roadway excavation with partial old roadway section [2-4]. As far as the fully mechanized top coal caving face is concerned, it is feasible to leave small coal pillars for roadway excavation and roadway along goaf. However, compared with ordinary fully mechanized top coal caving, there are still many problems in roadway maintenance and roadway support technology.

Many scholars have studied the surrounding rock control of roadway excavation along goaf.Tian Chunyang [5], based on the engineering background of 3-1101 gob driving roadway in the first mining face of Hongqinghe coal mine, comprehensively applied the research methods of internal and external stress field, limit equilibrium theory, numerical simulation and engineering practice, determined that the reasonable width of narrow coal pillar in gob driving roadway with deep and large mining height was 6m, and put forward the combined control technology of bolt, cable and shotcrete. Zhang Baisheng [6] studied the mechanism and surrounding rock control of roadway excavation along the goaf with 6m high mining height and small coal pillar for roof cutting and pressure relief in Fusheng coal mine of Lu'an Group by using rock pressure theoretical analysis, FLAC 3D numerical simulation and field measurement of roadway deformation, It is concluded that roof cutting and pressure relief and supporting

reasonable support technology can realize the stability of surrounding rock of gob side roadway with small coal pillar in the face mining stage and the mining stage of this working face. Wu Guoqiao [7] takes the transportation roadway of 2303 working face of Weijiadi coal mine as the engineering background, adopts the methods of theoretical analysis, numerical analysis and field practice in view of the unbalanced load stress of gob side roadway in gently inclined coal seam, asymmetric large deformation and damage of two sides of coal and difficult roadway maintenance, The high prestress yield pressure control technology of short anchor cable support in the area with zero near horizontal displacement in the middle of coal pillar wall (pressure bearing area) and high-strength anchor cable support in the area with serious lateral compression and shear damage of solid coal (depth up to 6~7m) is proposed. Cheng Lixing [8] proposed the gob driving roadway support technology with "high prestress active support, grouting modified reinforcement and strong wall top protection" as the core, and the field monitoring verified the effectiveness of this technology, These research results are all the research on the surrounding rock control of roadway excavation along the goaf, but the research on the cooperative control technology of roadway excavation along the goaf with special-shaped coal pillar in inclined thick coal seam is relatively few.

Therefore, based on the low support efficiency of large section transportation roadway, U-shaped steel, shed and other common supports in 2303 working face of Weijiadi coal mine, this paper reveals the surrounding rock control mechanism by studying the deformation and failure characteristics of special-shaped coal pillar goaf roadway in inclined thick coal seam and the shear slip deformation characteristics of weak plane, and puts forward the bolt anchor cable cooperative support technology, which can be used as a reference for the surrounding rock control under similar geological conditions.

2. Project Overview

Working face 2303 of Weijiadi coal mine in Jingyuan mining area in Gansu province, is located in the West No.2 mining area 3# coal seam, with working faces 1306 and 1308 goaf in the East, working face 2301 goaf in the north, working faces 2103 and 2105 goaf at the top, and roadway protective coal pillar in the West No.2 mining area in the West. The design direction of the working face is 1122m, the inclined length is 232.5m, and the distance from the goaf of the upper No.1 coal seam is 48m. It is basically not affected by the mining of the overlying coal seam. The total thickness is 5.9m~7.6m, with an average of 7.5m, the dip angle of coal stratum is 19~26°, with an average of 25 °. The mining depth of the coal seam is 452~536m, the transportation roadway is excavated along the coal seam floor, and the roadway section is 5.4m×3.9m (of which the height of the straight wall is 1.2m).

3. Design of High Resistance and Pressure Yielding Support

3.1. Principle of High Resistance and Pressure Yielding Support

In anchor mesh support, the tray can be divided into rigid tray and deformed tray. At present, the tray used is mainly deformable tray. According to the tray shape, it can be divided into dish tray and plate tray. Dish tray uses the slight deformation generated by the compression of dish arc surface to produce sufficient prestress to the anchor rod body. Because of its simple structure, easy processing and low cost, it can save 25%~50% steel compared with flat pallet under the same conditions, and can bear large bearing capacity. It has been widely used in coal mines. The stress of butterfly tray is shown in Figure 1.

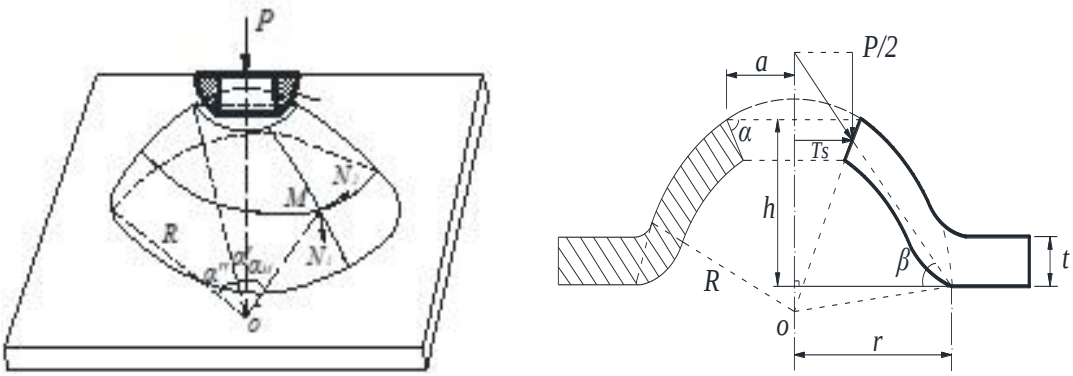

(a) Tray structure model (b) Tray geometric section

Figure 1: Mechanical calculation model of tray spherical shell

When the tray is installed underground, the preload load is transmitted to the orifice contact surface through the directional ball pad, and then spread to the arch and the whole flat plate structure. Zheng Yangfa verified through the test that the bearing capacity of the tray is mainly determined by the ultimate expansion load of the conical contact surface of the orifice. The stress analysis of the circular belt on the orifice cone of the arched tray section is shown in Figure 1 (b). Through the decomposition and calculation of the structural pressure on the orifice cone, the ultimate bearing capacity of the tray can be obtained:

$$\begin{gathered} P_b = \sigma_b \pi a[R - \frac{(R-t)^2}{R}]\sin\alpha\tan\beta \\ P_s = \sigma_s \pi a[R - \frac{(R-t)^2}{R}]\sin\alpha\tan\beta \\ R = \sqrt{r^2 + \frac{(r^2 - a^2 - h^2)}{4h^2}} \\ \sin\alpha\tan\beta = [h\sqrt{1-\frac{a^2}{R^2}} - t(\frac{1}{2} - \frac{a^2}{2R^2})] / (r - a + \frac{at}{2R}) \end{gathered} \tag{1}$$

Where: P_b is the ultimate bearing capacity of the tray; P_s is the bearing capacity of the pallet at yield; σ_b is the ultimate tensile strength of tray material; σ_s is yield strength, and other symbols are marked in Figure 1 (b).

For circular or arc roadway, according to the theory of composite arch, the surrounding rock will be reinforced with anchor bolts to form composite arch or anchor balance arch. The support strength of circular or arc roadway can be calculated by Lamar formula:

$$\left.\begin{gathered} p_{\mathrm{m}} = \frac{\sigma_m}{2}[1 - \frac{R_m{}^2}{(b+R_m)^2}] \\ b = \frac{L_m \tan\theta - d}{\tan\theta} \end{gathered}\right\} \tag{2}$$

Where: p_m is the support strength; σ_m is the strength of anchor; R_m is the net radius of the roadway; b is the thickness of composite arch; L_m is the effective length of anchor rod; θ is the control angle of anchor bolt in rock mass, generally 45 °; d is the row spacing between anchor bolts.

The pressure relief distance generated by the pressure relief pipe bolt in the process of surrounding rock support is equivalent to improving the yield resistance of the bolt. The yield strength of the pressure relief bolt is:

$$\sigma_s = \sigma_m \frac{1-\dfrac{R_m^{\ 2}}{(b+\Delta b+R_m)^2}}{1-\dfrac{R_m^{\ 2}}{(b+R_m)^2}} \tag{3}$$

Where: σ_s is the yield strength of the anchor rod; Δb is the let down distance, i.e. the thickness of the wooden pallet.

According to the technical requirements for bolt tray in the national standard GB/T35056-2018 of the technical code for bolt support of coal mine roadway, "the bearing capacity of the tray shall not be less than 1.3 times the standard value of the yield stress of the supporting rod body", including:

$$P_b \geq 1.3\pi r_m^{\ 2}\sigma_s \tag{4}$$

Where:r_m is the radius of anchor rod.

3.2. Pressure Yielding Yupport of 2303 Transportation Roadway

The specification of pallet in transportation lane of 2303 working face is 125mm×125mm×10mm, tray thickness t is 10mm, and the material is ordinary Q235 steel plate (lower limit of yield strength 235MPa, tensile strength range 370~500MPa). In calculation, the lower limit σ_b is 370MPa, aperture a is 12mm, tray arch bottom radius r is 40mm, tray arch height h is 30mm. Anchor bolt radius r_m is 11mm, material BHRB335 anchor bolt yield strength σ_m is 335MPa, and net section radius of arch roadway R_m is 2.6m, the effective length of the anchor rod is the length of the anchor rod. After removing the total thickness of the tray and exposing it for 20mm, the effective length L_m is 2.4m, the row spacing d between the anchor rods is 0.7, and the specification of the wooden tray is 200mm×200mm×60mm, the clearance distance Δb is 60mm, and the above parameters can be obtained by substituting into equation (4):

$$P_s = 127.4kN$$

$$P_b = 200.6kN \geq 168kN \tag{5}$$

The 200mm×200mm×60mm wooden tray can fully realize the equal strength of the anchor rod and the tray. At the same time, in order to prevent the wooden tray and the steel tray from being embedded into each other, a well shaped iron support plate is installed between the wooden tray and the steel tray. The well shaped support plate is welded by the waste U25 metal shed and the waste anchor rod. The specification is shown in Figure 2, and the thickness is 8mm (unit: m).

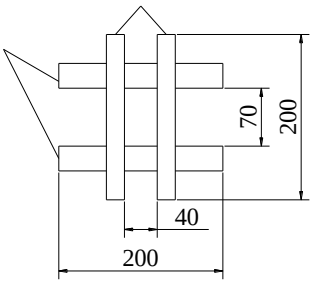

Figure 2: Processing diagram of well support plate

After the high resistance yielding bolt support is adopted, the surrounding rock deformation of the transportation roadway of working face 2303 is shown in Figure 3. The range of significant surrounding rock movement (≥ 100mm) and the range of severe surrounding rock deformation (≥250mm) is significantly smaller than that without support. The range of plastic zone of surrounding rock of solid coal wall is reduced by 0.5m, and the range of tensile shear failure of

shallow surrounding rock is reduced. As shown in Figure 4, the stability of surrounding rock is significantly enhanced.

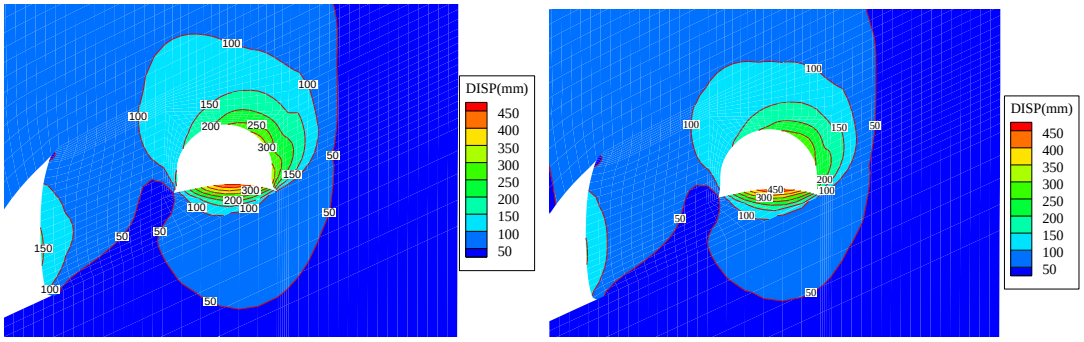

(a) Gob (b) High resistance yielding support

Figure 3: Cloud diagram of surrounding rock deformation of transportation roadway in 2303 working face

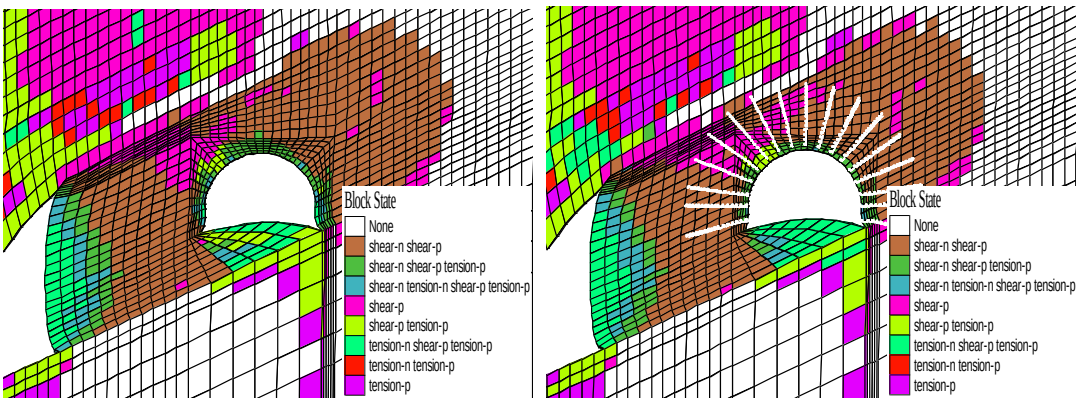

(a) Gob (b) High resistance yielding support

Figure 4: Cloud diagram of surrounding rock plastic zone of transportation roadway in 2303 working face

4. Prestressed Short anchor Cable Cooperative Support

4.1. Cooperative Support Principle of Prestressed Short Anchor Cable

Prestressed anchor cable is an anchor cable with prestress applied, and its elongation is relatively low. In order to avoid early breaking of the anchor cable, compressive stress is applied to the anchor cable in advance, which can partially offset the tensile stress caused by the load of the overlying strata during the service period of the anchor cable. As shown in Figure 5, there is an obvious displacement interface in the coal pillar wall. This interface divides the coal pillar wall into two approximate triangular areas. The surrounding rock in the upper triangular area moves to the free direction of roadway excavation, and the surrounding rock in the lower triangular area moves to the goaf. The stability of the surrounding rock near the interface is poor, so it is necessary to use support to inhibit the separation activity of the surrounding rock near the interface.

ISSN: 2664-9640

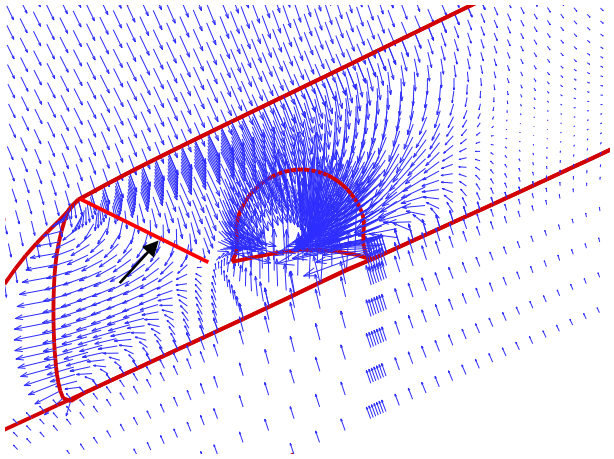

Figure 5: Location of coal pillar wall interface

4.2. Short Anchor Cable Cooperative Support Effect of 2303 Transportation Roadway

On the basis of high resistance yielding bolt support, after adopting the prestressed short anchor cable cooperative control technology, the surrounding rock stress field is shown in Figure 6. The bearing capacity of the coal pillar is significantly improved, especially in the anchor layer. Outside the anchor layer and in the cooperative layer, the bearing capacity of the coal pillar is also improved, but the range is small. Outside the cooperative layer, the vertical stress in the coal pillar is basically unchanged.

After adopting the prestressed short anchor cable cooperative control technology, the bearing capacity of the coal pillar wall is improved. The closer the horizontal distance from the coal wall surface is, the more obvious the lifting effect is, the vertical stress concentration of the solid coal wall is reduced, and the deformation of the two sides is further coordinated.

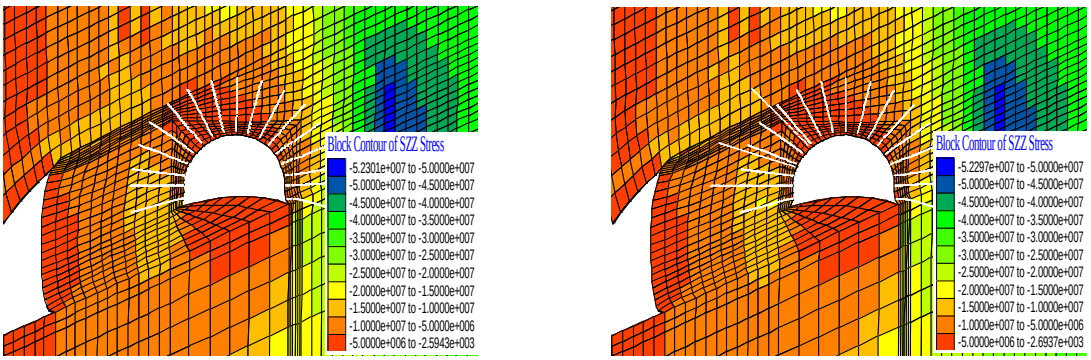

(a) High resistance yielding support (b) Prestressed short anchor cable cooperative support

Figure 6: Cloud diagram of vertical stress field of surrounding rock of transportation roadway in 2303 working face

5. Prestressed Long Anchor Cable Reinforcement Support

Prestressed anchor cable support and reinforcement is a real active role. It relies on the high anti sliding resistance provided by prestress to achieve the stability of rock mass. Ordinary anchor bolt support mainly passively causes the restraint effect of anchor bolt due to the deformation of rock and soil mass to achieve the stability of rock mass. Therefore, the support performance of prestressed anchor cable is obviously better than that of ordinary anchor bolt support. The prestressed anchor cable must be tensioned to the specified prestress, and its anchorage section must provide sufficient anchoring force. The diameters of mining anchor cables in China are mostly 15.24mm, 17.8m and 18.9mm, and the supporting drilling diameter is generally 28mm, while the difference between the anchor cable (rod) and the drilling

diameter is 6mm~10mm to ensure the anchoring effect. Therefore, when 17.8mm anchor cable is used, the anchor cable needs further processing to meet the needs of anchoring. Bird's nest anchor cable is specially developed, as shown in Figure 7. The diameter of bird's nest cage (1) is 2~3mm smaller than that of drilling hole (3), and the spacing distance between bird's nest cage (1) is 40~50cm.

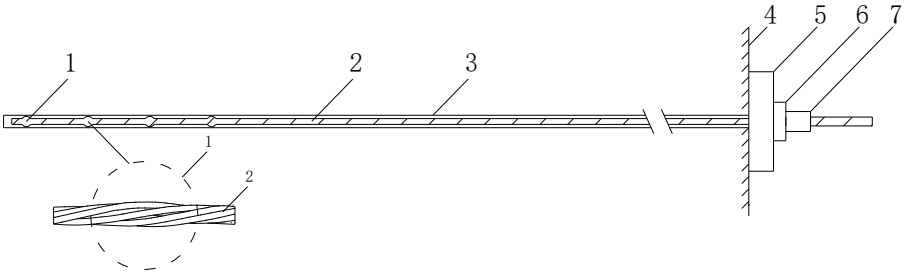

1-bird's nest cage, 2-steel strand, 3-drilling, 4-roadway surrounding rock surface, 5-channel steel, 6-steel base plate, 7-lock

Figure 7: Anchor cable structure of bird's nest

Based on the coordinated control technology of prestressed short anchor cable, after the reinforcement of prestressed long anchor cable, the vertical displacement field and horizontal displacement field of surrounding rock are shown in Figure 8. The roof subsidence is 246.28mm, the bottom heave is 463.73mm, the horizontal displacement of coal pillar side is 117.13mm, and the horizontal displacement of solid coal side is 235.45mm. Compared with the case without support, the roof subsidence is reduced by 11.3%, the displacement of two sides is reduced by 48.4%, and the surrounding rock control effect is good.

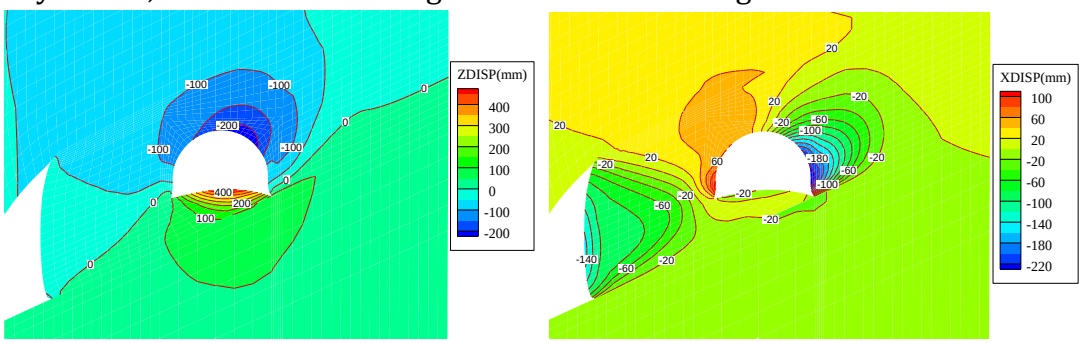

(a) Vertical displacement field (b) Horizontal displacement field

Figure 8: Displacement field of surrounding rock under reinforcement of prestressed long anchor cable

6. Conclusion

(1) The whole support system is composed of ordinary high-strength prestressed anchor rod, short anchor cable, long anchor cable and supporting components, forming a three-dimensional support system of high resistance and pressure yielding anchor layer, prestressed short anchor cable co control layer and prestressed long anchor cable reinforcement layer.

(2) There is an obvious displacement interface on the coal pillar wall. This interface divides the coal pillar wall into two approximate triangular areas. The surrounding rock in the upper triangular area moves towards the free direction of roadway excavation, and the surrounding rock in the lower triangular area moves towards the goaf. The stability of the surrounding rock near the interface is poor. On the basis of high resistance and pressure anchor bolt support, the bearing capacity of the coal pillar is significantly improved by using prestressed short anchor cable, especially in the anchor layer, the bearing capacity of coal pillar is significantly improved. Outside the anchor layer and in the cooperative layer, the bearing capacity of coal pillar is also

improved, but the range is small. Outside the cooperative layer, the vertical stress in coal pillar is basically unchanged. The vertical stress concentration of the solid coal slope is reduced, and the deformation of the two sides is further coordinated.

(3) After adopting the three-dimensional co-controlled bolt support technology in 2303 transportation roadway, the roof subsidence is reduced by 11.3% and the two side movement is reduced by 48.4%. The three-dimensional co controlled bolt support technology effectively controls the deformation of roadway surrounding rock.

Acknowledgements

Gansu Natural Science Foundation Project (21JR11RM049); Qingyang Science and Technology Planning Project (QY2021A-F026); Innovation Fund of Colleges and Universities of Gansu Province (2021B-278)

References

[1] C Jia，C.C. Hu. Instability mechanism and control technology of longwall entries driving along the gob in a thick coal seam, Journal of Mining and Strata Control Engineering，Vol. 2(2020) No.4, p.043535.

[2] B.Y. Zhang. Study on layout of staggered roadway and surrounding rock control technology for ultra contiguous coal seams, Coal Science and Technology, Vol. 49 (2021) No.8, p.88-95.

[3] Y.X. Liu, M.S. Gao, Y.L. He, et al. Study of control technology about gob-side entry driving with top-coal caving in inclined extra-thick coal seam, Journal of China University of Mining & Technology, Vol. 50 (2021) No.6, p.1051-1059.

[4] X.F. Bie， W Wang， S.J. Tang，et al．Surrounding rock control technology of gob-side entry driving in deep shaft with high stress roof cutting and pressure relief, Coal Science and Technology，Vol. 48 (2020) No.9, p.173-179.

[5] C.Y. Tian, Y.Y. Chang, T Zhu, et al. Narrow coal pillar width and surrounding rock control of gob-side entry driving in 6m high-cutting working face, Coal Engineering, Vol. 53 (2021) No.12, p.39-44.

[6] B.S. Zhang， P.F. Wang， S.Q. Cui，et al． Mechanism and surrounding rock control of roadway driving along gob in shallow-buried，large mining height and small coal pillars by roof cutting, Journal of China Coal Society，Vol. 46 (2021) No.7, p. 2254-2267．

[7] G.Q. Wu， L Li， H.S. Wang，et al． Width design of narrow coal pillar of gob-side entry driving in gently inclined coal seam and its control technology, Journal of Xi′ an University of Science and Technology，Vol. 40 (2020) No.4, p. 621-628．

[8] L.X. Cheng， H.P. Kang， P.F. Jiang，et al. Deformation and failure characteristics and control technology of surrounding rocks in deeply gob-side entry driving, Journal of Mining & Safety Engineering, Vol. 38 (2021) No.2, p. 227-236.