ISSN: 2664-9640

Visual Recognition and Automatic Feeding of Special-shaped Plate Parts based on LabVIEW

Feng Gao [1,2], Jiale Wei [1], Jialin Wang [1]

[1] Ruian College, Wenzhou Polytechnic, Wenzhou 325200, China;

[2] Merchant Maritime College, Shanghai Maritime University, Shanghai 201306, China.

Abstract

According to the requirements of "machine substitution" in the processing of motorcycle brake, a visual positioning recognition and automatic loading and unloading system of special-shaped plate parts based on LabVIEW is constructed. Using machine vision recognition method, the position of special-shaped plate parts is described quickly and accurately, and the hardware design and software implementation of the system are given. The test shows that the system meets the actual processing requirements.

Keywords

Special-shaped plate parts; positioning recognition; automatic loading and unloading;machine vision; LabVIEW.

1. Introduction

Most motorcycle brake parts are irregular plate parts, that is, special-shaped plate parts, on which there are many smooth holes or threaded holes for assembly. At present, most automobile and motorcycle manufacturers still need manual cooperation for the hole structure processing of the above parts, using manual loading and unloading and fixture positioning[1], as shown in Figure 1. This method has some problems, such as low production efficiency, bad working environment, large labor cost and so on. With the problems of difficult recruitment and fast flow becoming increasingly prominent, the traditional manufacturing relying on labor force is no longer satisfied with the demand, and it is an inevitable trend that manual loading and unloading are replaced.[2].

Figure 1: manual loading and unloading of typical motorcycle brake parts

Most of the equipment used for loading and unloading in automatic production are ordinary handling manipulators, which usually use manual teaching. It is suitable for working objects with single specification, known or unchanged position. For motorcycle brake parts with various specifications, unknown positions or sending changes, ordinary handling manipulator

ISSN: 2664-9640

is difficult to effectively replace manual loading and unloading. When grabbing the board parts with many specifications and uncertain feeding position, the key problem is how to quickly and accurately describe the specification information and position state of the product.[3-5] An effective method is to combine the visual positioning technology with the loading and unloading manipulator system, so that the whole system has the ability of human eye recognition, can obtain the specification, model and position state of the target workpiece in real time, and feed back the obtained information to the loading and unloading manipulator controller to guide the end actuator to work. Taking the motorcycle brake parts as the object, based on the LabVIEW development platform, this paper calls its rich professional airborne and function library to develop the visual positioning system of special-shaped plate parts.

2. System Control Principle

Take the motorcycle special-shaped plate part as an example. Five holes are distributed on the part, including smooth holes and threaded holes. The general process sequence is shown in Table 1. Process 1 and process 3 do not need a lot of manual intervention, while process 2 depends on the repeated operation of a large number of workers. The specific steps are as follows: First of all, workers use magnetic pick-up to manually clamp the special-shaped plate parts of motorcycle; Secondly, the motorcycle special-shaped plate parts are placed in the fixture on the drilling machine platform, so that the light hole corresponds to the positioning boss on the fixture; Then, operate the radial drilling machine to complete the processing of two threaded holes; Finally, the blanking is completed manually. The operation process of procedure 2 is shown in Figure 2. Therefore, the key to replace manual operation is to identify and adjust the spatial position state of motorcycle special-shaped plate parts so that the parts can be placed on the drilling machine platform as required in procedure 2.

Table 1: general process sequence of motorcycle special-shaped plate parts

Numble	Process	Content	Equipment
1	Blanking	Complete the processing of part appearance and 5 smooth holes	Laser cutting machine
2	Drill	Tap 2 M12 threads	Radial drilling machine
3	Deburring	Grind and remove all burrs	Grinder

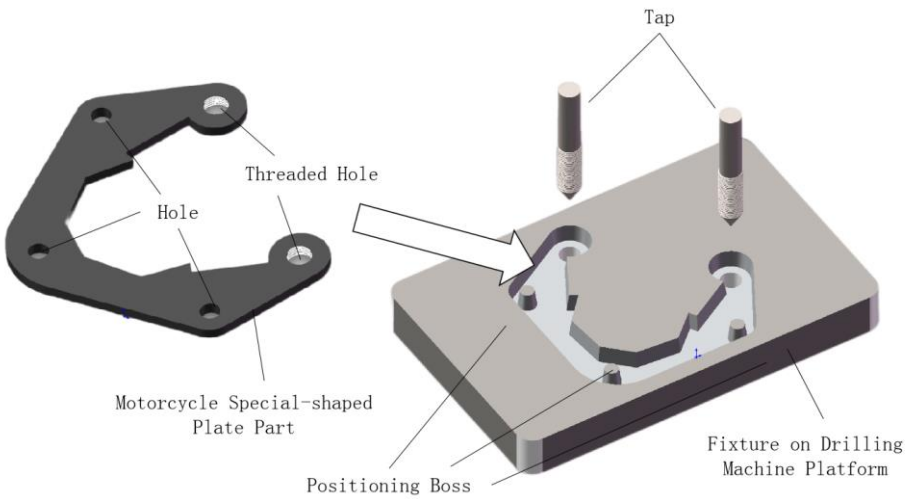

Figure2: operation process diagram of motorcycle special-shaped plate parts

ISSN: 2664-9640

Hole is an important structural information of motorcycle special-shaped plate parts. The position state of parts can be determined through the identification of hole position. Therefore, the hole position information is used as the basis of machine vision identification. In order to reduce the calculation amount of visual information extraction, set the required position of the part as the first quadrant, and select three hole positions as the calculation basis, as shown in Figure 3.

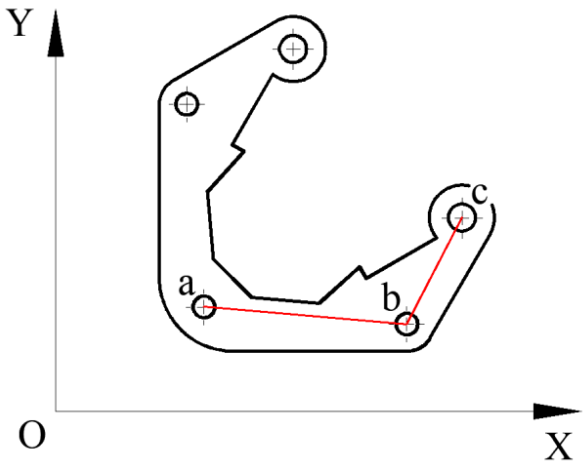

Figure3: selection of characteristic hole location

The standard position is calculated as follows:

$$\alpha_{bc} = arctan(y_c - y_b / x_c - x_b) \quad (1)$$

$$k_{ab} = y_b - y_a / x_b - x_a < 0 \quad (2)$$

$$k_{bc} = y_c - y_b / x_c - x_b > 0 \quad (3)$$

Where α_{bc} is the Angle between the straight line and the standard position of the X axis, k_{ab} is Slope of line of ab, k_{bc} is Slope of line of bc, x_a is X-axis coordinates of a, x_b is X-axis coordinates of b, x_c is X-axis coordinates of c, y_a is Y-axis coordinates of a, y_b is y-axis coordinates of b, and y_c is Y-axis coordinates of c.

The adjustment method of part angle is as follows:

(1) Adjust the part position to the first quadrant area, as shown in Table 2.

Table 2: method of adjusting parts to the first quadrant area

Numble	Parameter relation	Position status	Adjustment method
1	$k_{ab}<0$, $k_{bc}>0$, and $x_c>x_b$	First quadrant	No adjustment
2	$k_{ab}>0$, $k_{bc}<0$, and $x_c<x_b$	Beta quadrant	Rotate 90 ° clockwise
3	$k_{ab}<0$, $k_{bc}>0$, and $x_c<x_b$	Third quadrant	Rotate 180 ° clockwise
4	$k_{ab}>0$, $k_{bc}<0$, and $x_c>x_b$	Delta quadrant	Rotate 90 ° counterclockwise

Adjust to the angle of standard position: calculate the included angle value between the current straight line and X axis, and adjust the corresponding angle according to the difference with the standard position. The difference is positive and rotates clockwise; The difference is negative and rotates counterclockwise.

ISSN: 2664-9640

3. System Hardware Composition

The hardware system includes three parts: feeding and transmission module, image acquisition and processing module, position adjustment and blanking module. The principle design is shown in Figure 4. The feeding and transmission module completes the part input and transmission of process 1, which is mainly composed of conveyor belt and magnetic suction device. The image acquisition and processing module completes the acquisition and analysis of the part position image, and guides the manipulator operation after determining the position angle. It is mainly composed of industrial camera and host computer. The position adjustment and blanking module completes the position change and blanking placement of parts to meet the requirements of the next process. It is mainly composed of industrial manipulator and blanking placement mechanism. The main structure design is shown in Figure 5. Industrial manipulator and conveyor belt adopt stepping motor. The stepping motor is connected with the upper computer through the driver and motion control card. The wiring diagram of the driver and motion control card is shown in Figure 6[6].

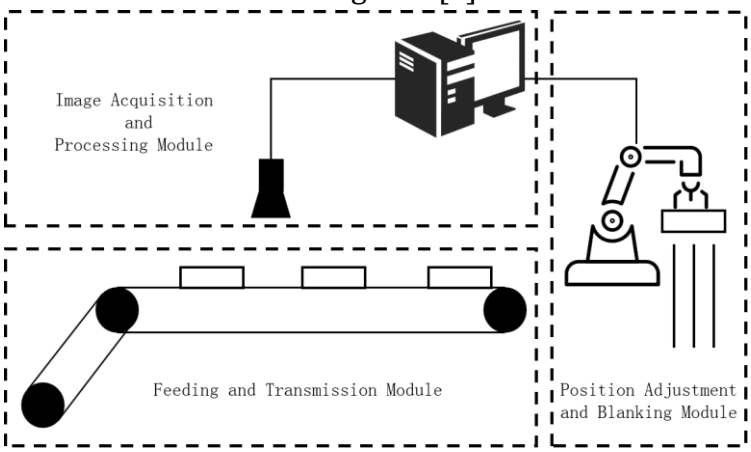

Figure4: schematic design diagram of hardware system

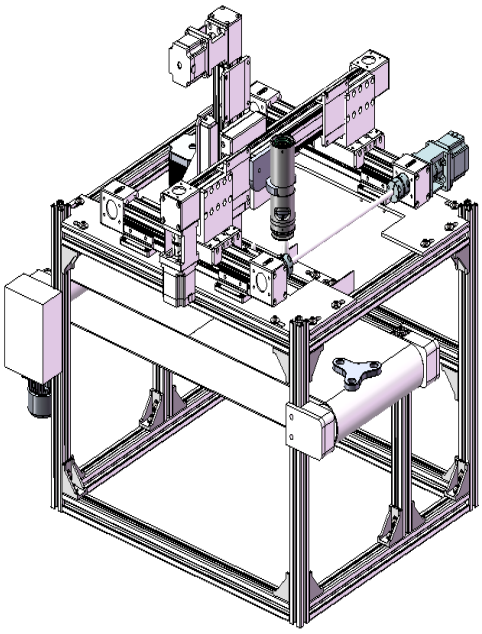

Figure5:main structure design

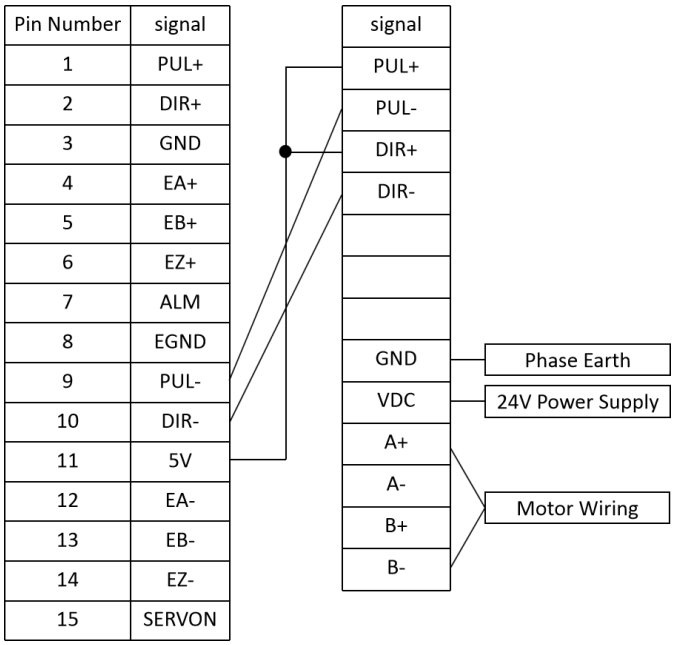

Figure6:connection of driver and motion control card

ISSN: 2664-9640

4. System Software Design

The system design mainly includes image acquisition function, image analysis and processing function and motor motion control function. Each functional module completes certain visual tasks: the image acquisition function controls the camera to obtain the original image; The image analysis and processing function is used to obtain the position information of the feature hole position and calculate the position state of the part; The motor motion control function is used to send motion control information to the actuator. The interactive interface of the system software is shown in Figure 7.

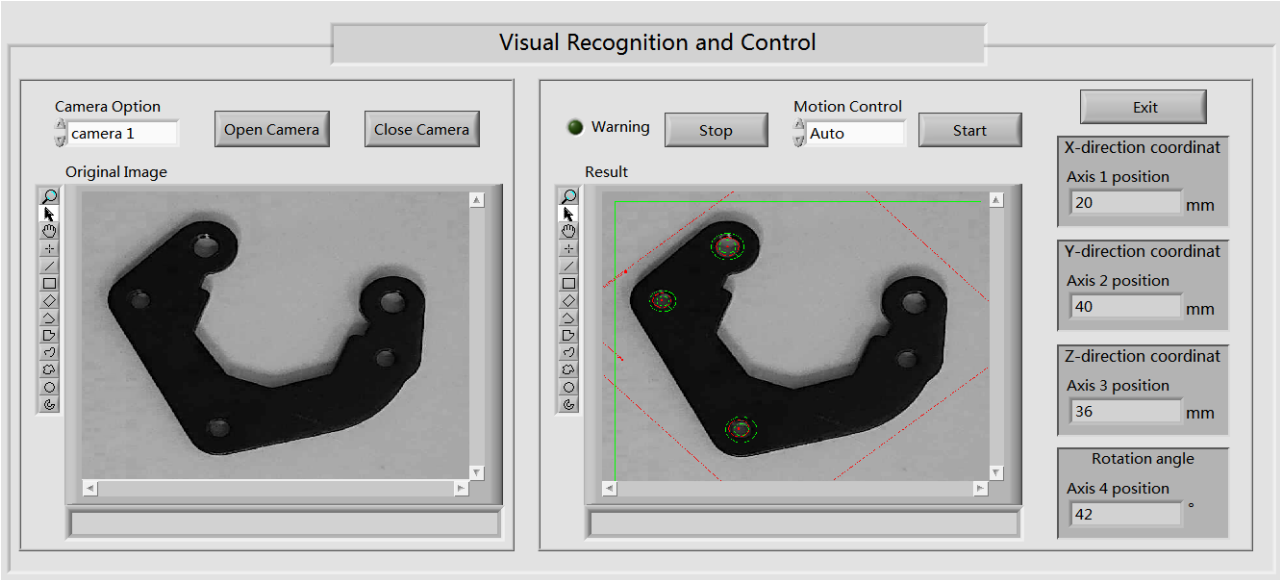

Figure7: interactive interface of system software

The image acquisition program includes five steps: the first step is initialization; Step 2 is to call imaqcreate Vi. create multiple image data buffers; Step 3 is to call imaqsequence VI collect multi frame image data. When the specified number of images are collected, imaqsequence VI will return and end the sequence acquisition process; Steps 4 and 5 are release procedures. Fig. 8 is a LabVIEW code that acquires an image from hardware and displays it.

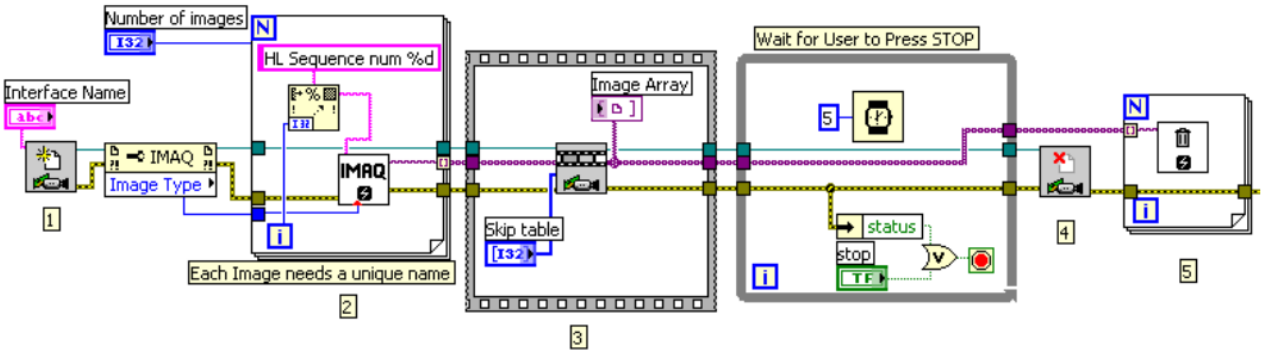

Figure8: LabVIEW code diagram of image acquisition

Image analysis and processing are realized by template matching, circle detection and geometric measurement in machine vision operator. The pattern matching process of image generally includes two stages: learning and matching. [7-8]In the learning stage, the algorithm will extract the feature information for image matching from the template image, and store them in the template image in a way convenient for search for later use. In the image matching stage, the algorithm extracts the same type of feature information from the measured target image, analyzes their similarity and consistency with the feature information in the template image, and determines the matching area in the target image with the template image. The image matching process generally takes the template image and the measured target image as

ISSN: 2664-9640

the input, and outputs the scaling ratio of the number, position and angle of matching targets relative to the template, as well as the similarity between the template image and the template image expressed by the score value. Find circular edge and caliper are used for part position analysis. Use the find circular edge tool to identify the coordinates of three feature hole positions. Use the geometric measurement tool (caliper) to obtain the included angle between the figure and the x-axis. Figure 9 shows the LabVIEW code of image analysis and processing.

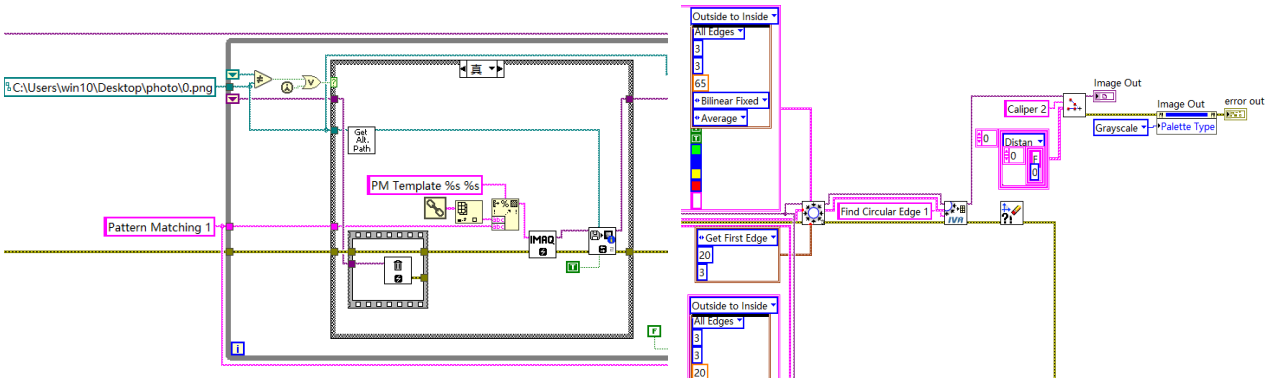

(a) Pattern Recognition (b) Geometric Measurement

Figure9: LabVIEW code diagram of image analysis and processing

Motor motion control is realized by serial communication between upper computer and motion control card. The upper computer communicates with the motion control card through PCI bus, sends the motion control signal to the motor driver through the motion control card, drives the servo motor to move, and finally controls the mechanical actuator to move. The motion control card can control the motion of the motor by outputting high-frequency pulse train, control the motor speed through the pulse frequency sent by the motion control card, control the motor angle by the number of pulses sent, and control the motor acceleration by the change rate of pulse frequency, so as to realize the position control, interpolation drive, acceleration and deceleration of the motor. After receiving the motion control signal from the motion control card, the motor driver sends the drive signal and control signal to the motor to drive the motor to rotate and control the speed, angle, acceleration and deceleration and motion direction of the motor. Finally, the rotation of the servo motor drives the corresponding mechanical actuator to realize motion control. Figure 10 is the LabVIEW code diagram of motor motion control.

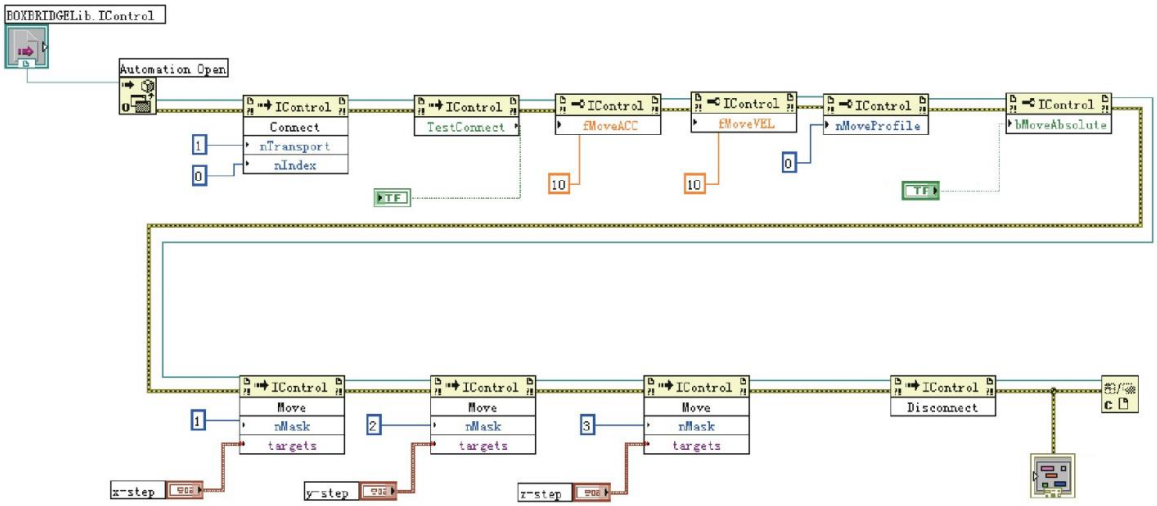

Figure10: LabVIEW code diagram of motor motion control

ISSN: 2664-9640

5. Analysis of Test Results

The test results are shown in Table 3. The test error is within 5%, which meets the progress requirements and achieves the purpose of detection.

Table 3: test results

Actual angle (°)	24	41	12	37
Identification angle (°)	25.1	41.4	11.5	36.4
Relative error (%)	4.58%	0.98%	4.17%	1.62%

Acknowledgements

2020 Wenzhou Polytechnic Major Scientific Research"Research and implementation of visual positioning and automatic feeding system for special-shaped plate parts"(No. WZY2020009)

References

[1] Zhang Guofu, Shen Hongyan: Application of machine vision technology in industrial inspection, Electronic Technology & Software Engineering, 2013(22):111.

[2] Zhao Chunming, Li Zhen, Li Hongbing, Peng Gang: Machine Replacing Human: The application of industrial robots and local labor market adjustment, Social Sciences Digest, 2021(01):53-55.

[3] Jia Hao, Zhang Ye, Cui Zhongzheng, Xu Zhao, Yang Yang, Xu Jia: Application of machine vision technology based on NI Vision, Electronic Test, 2018(21):28-29+39.

[4] Wang Kai, Zhang Lei: Research on machine vision location system based on Lab View in automotive leaf spring production, Wireless Internet Technology, 2021,18(22):85-87.

[5] Xin yu Suo: Development and application of nuclear fuel rod visual recognition and location system based on LabVIEW and PLC, Hunan University, 2018.

[6] XIE Heng, MA Qiu-li, HUANG Yu-feng, WANG Cheng-long: Design of robot vision guidance system based on Labview, Manufacturing Automation, 2019,41(07):111-113.

[7] Li Guangming, Sun Yingshuang, Dang Xiaojuan: Design and implementation of geometric matching method based on LabVIEW, Computer Engineering and Design, 2016,37(10):2705-2709.

[8] Zhang Qiaoli, Li Guangming, Wang Xiaojing: Design and Implementation of Geometric Match Method based on LabVIEW, Computer Engineering and Design, 2015,36(09):2422-2426.

[9] Li Fuguo: Research of 6-DOF industrial robot control system based on motion control card , Changchun University, 2020.