ISSN: 2664-9640

Design of contactless oil leakage monitoring based on spectral analysis

Xiaotong Yan, Chao Zhang

School of physics and electronic engineering, Taishan University, China

Abstract

Oil leakage brings an immeasurable threat to human health and biological resources. How to strengthen the emergency treatment of oil leakage and minimize the economic loss and environmental loss caused by oil leakage in water and land has been a difficult problem to improve and restore the ecological environment balance for a long time. Non-contact oil leakage monitoring design based on spectral analysis integrated application of modern optics, with the single-chip processor as the core, combined with LIF correction technology, three-dimensional fluorescence spectrum technology, and algorithm analysis, the qualitative identification of oil material, realizes automatic fast accurate leak monitoring function, at the same time the remote networking platform can real-time data storage and transmission, Access the PC and mobile phone to view environment information for real-time security and intelligent management.

Keywords

Spectroscopy, Laser-induced, Fluorescence, three-dimensional, Fluorescence spectroscopy technology single-chip, Microcomputer.

1. Introduction

The project is based on the LIF technology, combined with the 3D fluorescence spectrum and the second-order linear analysis. It is an integrated and automatic oil leakage monitoring device for the fast, efficient, and high precision determination of oil substances when interference coexists. System consists of the spectral measurement and algorithm analysis and control of processing parts, optical device, wavelength identification mechanism, all-solid-state photoelectric components and circuit control and signal acquisition device, using ultraviolet reflex laser stimulate oil substances, collection and analysis of the fluorescence spectrum data to determine the characteristic parameters of the object under test, qualitative identification, The non-contact oil leakage monitoring system based on spectral analysis to portable miniaturization design requirements, design based on STM32F103CB microcontroller drive method, and combining the current integral circuit and external high-speed analog-to-digital conversion circuit, can satisfy different type detection range, all-weather automatic detection of oil monitoring, high sensitivity to detect leak or spill, At the same time, the emergency response is initiated to notify the person in charge, so that the user can grasp the dangerous situation as soon as possible and react quickly to reduce or avoid the loss caused by the accident.

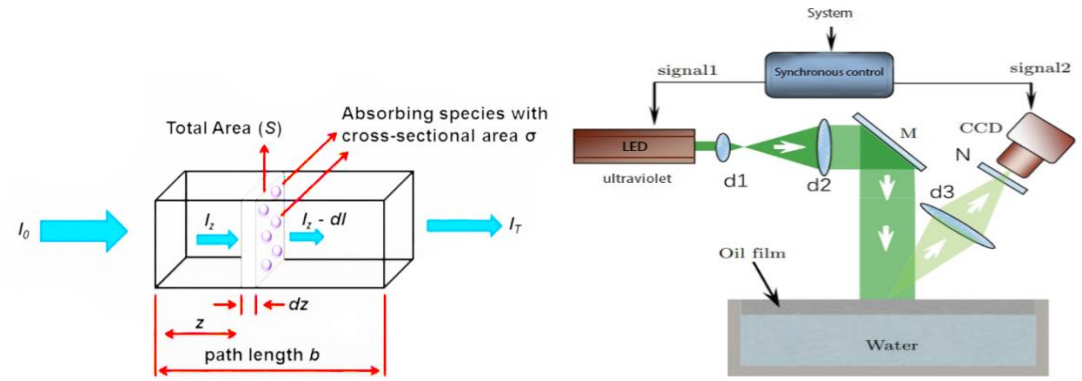

Fig.1. Block diagram of Lambert-Beer model and spectrum measurement principle of LIF technology

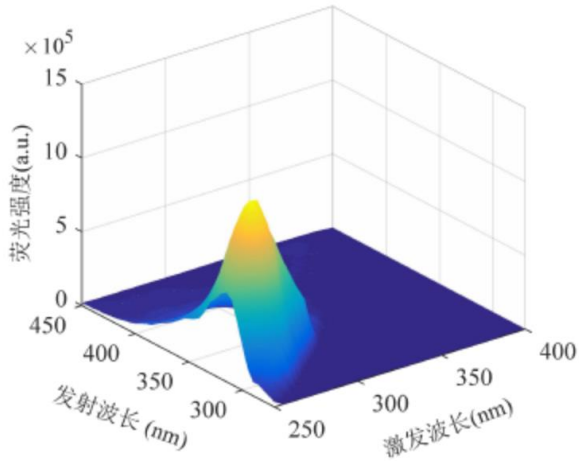

Fig.2． isometric three-dimensional projection spectrum of the oil to be measured

2. The overall structure and principle of the system

The design of non-contact oil leakage monitoring based on spectral analysis is divided into two parts: spectral measurement and algorithm analysis part and in-process control part.

1. Spectral measurement and algorithm analysis

According to Lambert-Beer law, the emission fluorescence light intensity has A linear relationship with the concentration of the oil sample to be tested, and the relationship between the concentration of the solution to be tested and the absorbance is A= -logT =ε Cl (where A is the absorption rate, ε is the molar extinction coefficient, C is the concentration of the absorbent substance, L is the optical path). The spectral refractive index and absorption index of the sample to be tested is calculated according to the formula. It provides data support for accurately judging the characteristics and types of oil in the measured area. The concentrating module adopts a UV-visible band lighting source and PMMA lens, with a built-in integrated constant-current driving circuit. The integrated structure of lamp beads, driving power supply and the radiator is designed. The module will gather the light source and irradiate it to the collimating system for dispersion, and the imaging objective lens will form spectral bands according to the multi-beam monochromatic light obtained. After being converted into an electrical signal, it is processed by a circuit and then converted into a digital signal for computer data processing. Set during oil samples, the optimal parameters of laser samples, to obtain optimal excitation wavelength and emission wavelength, the total fluorescence under test sample data collected through the computer, the emission wavelength of the x-axis, excitation

wavelength to the y-axis, fluorescence intensity for z-axis 3 d projection, combined with the second-order linear correction algorithm finally realizes the accurate monitoring of oil leakage.

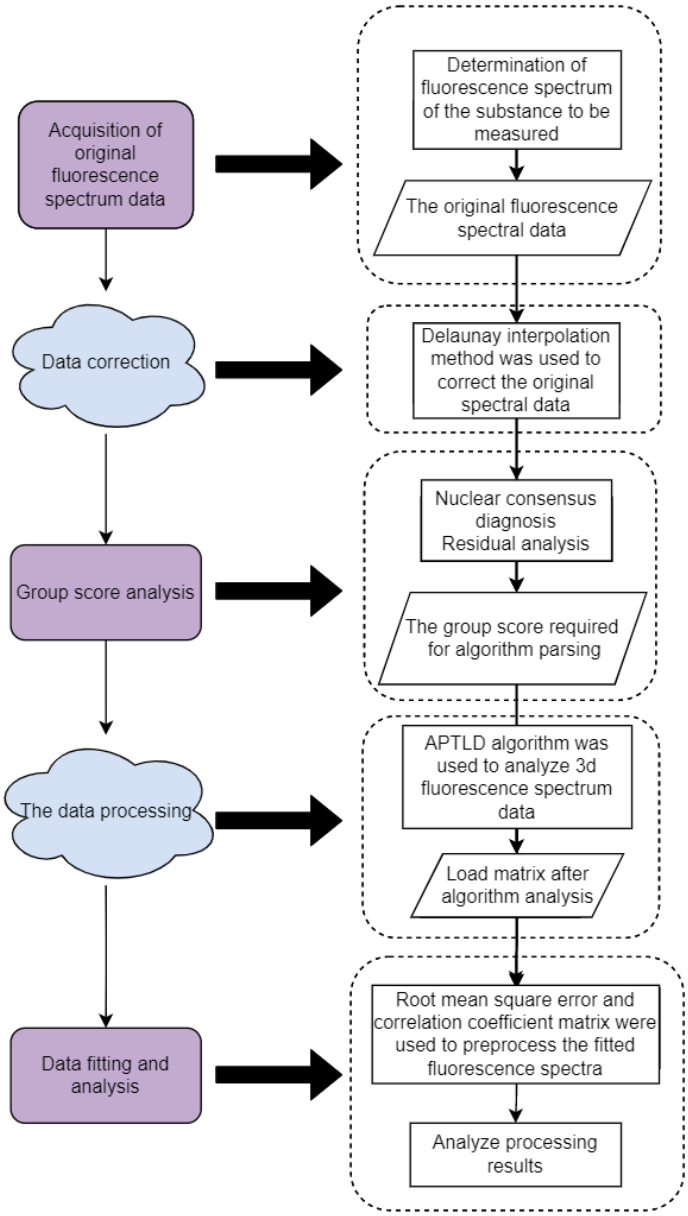

Fig.3. Diagram of oil detection implementation process

2. In-process control

In order to realize the portability of the circuit system, in the control design of the hardware system, the microcontroller with a small volume and high integration degree drive the multi-channel monitoring device, which can be integrated into the internal of the optical system. The central control system includes a data processing layer, platform layer, and application layer. The data processing layer is composed of a circuit driver module, communication transmission module, and power supply voltage module. The communication transmission module transmits the data obtained by external Flash chip AT29LV512 to the PC through the main control chip to realize a communication connection. Using the LORA communication protocol, the platform layer has powerful analysis and computing capability, and edge calculation is realized in the station. Conclusions are drawn through the comprehensive analysis of multi-dimensional data. The application layer is divided into an intelligent control module and user service module, which has complex and professional data analysis and processing capability, can timely find oil leakage or oil spill phenomenon, start emergency response and timely feedback, and notify

ISSN: 2664-9640

users through communication so that users can grasp the situation as soon as possible and reduce or avoid losses caused by accidents.

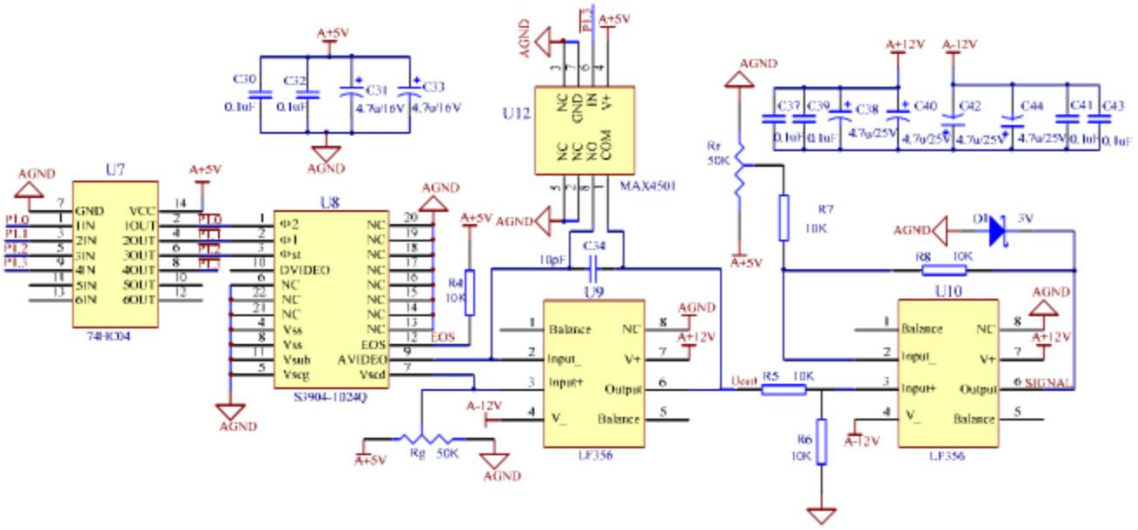

Fig.4. Schematic diagram of driving and signal processing circuit

3. Conclusion

This design uses LIF technology, 3D fluorescence spectra techniques, and algorithm correction analysis, spectral measurement and analysis, in-process control to achieve accurate identification of oil pollutants, Lora protocol, the application of a single-chip microcomputer control circuit, system hardware design. The design of distribution in oil storage, low power consumption, high sensitivity, high safety, and reliability, is widely used in transportation, industrial and environmental field monitoring of oil products, reducing oil leakage of harmful effects on the scope for land and water, to carry out related accident investigation, field personnel to rescue and recover the ecological environment is of great significance.

References

[1] Jiang Congcong Research on identification method of offshore oil spill types based on three-dimensional fluorescence spectrum [D] Ocean University of China, 2015

[2] Cui Yaoyao, Kong Deming, Kong lingfu, Wang Shutao, Shi Huichao Research on oil identification method based on reconstructed three-dimensional fluorescence spectrum combined with partial least squares discriminant analysis [J] Spectroscopy and spectral analysis, 2020,40 (12): 3789-3794

[3] Zhi Guozheng Research and application progress of three-dimensional fluorescence spectroscopy in water environment [J] Sichuan environment, 2021,40 (05): 257-261 DOI:10.14034/j.cnki. schj. 2021.05.040.