ISSN: 2664-9640

Portable Sitting Posture Monitor Based On Internet Of Things

Xiaoyu Wang, Yingchun Li, Junhao Zhai

University of Science and Technology Liaoning, China

Abstract

This project discloses a portable learning sitting posture monitor based on the Internet of Things, which comprises a belt body, a support bar vertically arranged on the belt body, corresponding to the lumbar position of a user, an inclination sensor arranged on the support bar, the output end of the inclination sensor electrically connected with a controller, an air bag and a micro air pump arranged at the front of the belt body,The output end of the micro air pump is connected with the airbag, the control end of the micro air pump is electrically connected with the controller, and the belt body is also provided with a wireless communication module and a power supply module. This project is based on the portable learning monitor of the Internet of Things. Through the inclination sensor, the posture data of the belt support bar is collected in real time to monitor the students' sitting posture. At the same time, the speaker is used to remind them.Prevent students from causing myopia or even lumbar and cervical problems due to long-term improper sitting posture or long study time.

Keywords

Internet of Things, portable, learning sitting posture, monitor.

1. Introduction

Aiming at the health risks caused by sedentary phenomenon, this design uses the Internet of Things technology, based on the Internet of Things platform Blinker, and combines wifiduino MCU to design a low-cost sedentary prevention detection device. The infrared obstacle avoidance sensor senses the user's state and counts time, and the system feeds back the alarm information to the user's mobile phone through the preset alarm threshold.And save the statistical data to the cloud, and feed back to users in the form of charts. After testing, the effective distance of induction is about 15cm, which can accurately feed back the required data.

With the increasing popularity of mobile phones and computers in life, sedentary phenomenon has become increasingly common. According to the research, sedentary is harmful to people's health. Sedentary will increase the risk of heart and lung diseases in sedentary people, affect heart and lung function, reduce immunity, and even aggravate heart disease and lung system diseases in some people, making them persistent.In 2003, the WHO study showed that about 2 million people died every year because of sedentary. It is estimated that by 2020, about 70% of diseases will be caused by sedentary. At present, some research has been carried out on sedentary prevention. The products related to sedentary prevention on the market can be roughly divided into cushions, tables and chairs, intelligent devices and protective gear.All of these products have their own effects in preventing sedentary hazards, but they all have their own defects. For example, the existing cushion products only have a single vibration or heating function, and most cushion products are in the form of cushions to reduce the pressure between hip bones and seats, but they do not reduce the pressure on spine.This design is based on Blinker platform. By monitoring users' sedentary time and reminding them, users can actively avoid sedentary behavior, so as to achieve better prevention effect.

ISSN: 2664-9640

2. Background art

It is understood that at present, there are more than 100 million primary and middle school students with myopia in China. Incorrect reading and writing posture and too long use of eyes at close range are important reasons for poor eyesight of teenagers. When students first enter the school, teachers will teach them the correct writing posture, but without supervision, it is difficult for most students to maintain a correct sitting posture. At the same time,Because of the variety of homework, once students start to do homework, it often lasts for several hours or even longer, which not only harms students' eyesight, but also damages students' spine in the long run.

Therefore, there is an urgent need to put forward a monitor for students to learn sitting posture.

3. Project content

System working structure

Introduction to Blinker Platform Blinker is a set of cross-hardware and cross-platform Internet of Things solutions, which provides support for APP, device and server, and uses public cloud services for data transmission and storage. It can be used in smart homes, data monitoring and other fields, and can help users build Internet of Things projects better and faster. Blinker consists of server, app and device.It can be deployed to most IoT platforms. The app supports ios and android devices, and the device can be accessed by Bluetooth, WiFi, MQTT, etc. It supports Arduino, freeRTOS, mbedOS, Linux and other development platforms. The server can be deployed to Alibaba Cloud, Tencent Cloud, OneNET, Baidu Cloud, AWS, google cloud and other platforms. Through the interface layout device, DIY users can drag and drop the layout device control interface by themselves.Free to build IoT devices. In this design, the communication with mobile APP and the time data monitoring and recording function are all completed by this platform.

The detection system designed for the working structure of the system will start timing after detecting that the user is seated, and automatically communicate with the mobile APP via WIFI every 30s to upload data. The threshold value of the duration of a single reminder is set to 60 minutes. After it is reached, the APP will send the reminder information to the user's mobile phone and remind by pushing the message and shaking the mobile phone.Then clear this single time and start to re-time. The timer will also be cleared and kept waiting after it is judged that the person has left the seat for less than 60 minutes in a single session but one minute in a row. Cumulative duration will continuously record the total duration of the user sitting for three days,And upload the data to the cloud every day to get the daily sedentary time data and display it in the Blinker app interface in the form of a line chart to better remind users.

System scheme design system hardware design:

(1) sensor selection: in this design, the infrared obstacle avoidance sensor is selected, which is mainly composed of a pair of infrared transmitting and receiving tubes, potentiometers and LM393 comparator circuits. There are three ports: VCC, OUT and GND. VCC and GND are the anode and cathode of the module respectively, and OUT is the signal output port of the module. When the module works, the emission tube continuously emits infrared rays with a certain frequency,When an obstacle is encountered in the detection direction, the infrared rays will be reflected back. After being processed by the LM393 comparator circuit, a digital signal (low-level pulse) will be output through the signal output interface and the green indicator light on the circuit board will light up. The detection angle range of the module can be up to 35. The detection distance of the module can be adjusted (2-30CM) by rotating the potentiometer knob of the module.Clockwise distance increases, otherwise distance decreases. The sensor module has the advantages of strong adaptability to light, strong anti-interference ability, simple

structure and easy use, and is widely used in many occasions. It is expected that this design will be fixed on the user's chair back or placed on the desk in actual use. Considering all kinds of interference in this environment,It is advisable to control the detection distance at about 10-30cm. After testing, it is found that the feedback data of infrared obstacle avoidance sensor is the most stable and reliable compared with other sensors such as ultrasonic ranging sensor HCSR04 and pyroelectric human body induction module HC501. The effective detection distance is about 15cm, which basically meets the design requirements.

(2) MCU selection: In order to better provide the function expansion of the Internet of Things, wifiduino-8266 MCU is selected in this design, which is a development board based on Arduino open source hardware and embedded with ESP-8266WIFI communication module. Arduino is a convenient, flexible and easy-to-use cross-platform open source MCU electronic design platform,There are many interfaces designed for the sensor module on the hardware development board. Only by plugging in the packaged corresponding functional modules, you can read the signals acquired by the sensor from the outside and make corresponding feedback under the command of the program, which greatly improves the efficiency of the program. Besides, it has the advantages of simple structure and convenient use.ESP8266 series modules are a series of wifi modules developed by Ai-thinker company using Lexin ESP8266 chip. They support 802.11b/g/n network communication protocol, have a built-in 32-bit CPU, and can also be used as a processor. Because of its simple structure, easy operation and low price, they are widely used. In this design, ESP-8266 module is responsible for the communication between the development board and Blinker mobile APP.

(3) Hardware connection: The main hardware in this design includes wifiduino-8266 development board, infrared obstacle avoidance sensor and 9V battery box. Wifiduino-8266 development board is the control center of the whole system, and the infrared obstacle avoidance module obtains the sedentary state of users and serves as the judgment basis for timing. The D7 port of Wif-iduino-8266 development board is connected to the OUT port of the infrared obstacle avoidance module for low-level signal output.The V3 port corresponds to the VCC port of the connection module, providing the required 3.3V DC working voltage for the infrared obstacle avoidance module, and the GND port corresponds to the GND port of the module. The power supply of the whole design is provided by a 9V lithium battery, which is connected to the DC interface of the development board through a battery box. Software design: The design of single-chip microcomputer program adopts modular design. It can be divided into three parts:A state determination part, a data processing part and a data transmission part. In the process of debugging, each subprogram is compiled and debugged separately, and then imported into the development board for unit testing. After passing, all programs are combined and imported for overall functional testing.

The purpose of this project is to overcome the shortcomings of the prior art, and propose a portable learning sitting posture monitor based on the Internet of Things, so as to solve the problems of vision loss and spinal deformation caused by students' poor sitting posture and long continuous learning, and also facilitate parents to remotely master their children's learning situation.

In order to achieve the above purpose, the portable learning sitting posture monitor based on the Internet of Things designed in this project includes a belt body, which is characterized in that a support bar is vertically arranged on the belt body, which corresponds to the lumbar position of the user, and is provided with an inclination sensor, the output end of which is electrically connected with the controller.The front part of the belt body is provided with an airbag and a micro air pump, the output end of the micro air pump is connected with the airbag, the control end of the micro air pump is electrically connected with a controller, a wireless communication module and a power supply module are also arranged on the belt body, and the controller is electrically connected with the wireless communication module.The power supply

ISSN: 2664-9640

module is electrically connected with the inclination sensor, the controller, the micro air pump and the wireless communication module.

The rear part of the waistband is provided with a pyroelectric infrared sensor, and the output end of the pyroelectric infrared sensor is electrically connected with the controller, and the pyroelectric infrared sensor collects temperature information; when the collected value of the pyroelectric infrared sensor reaches the temperature range of human body, the controller starts the inclination sensor.

The airbag is more strip-shaped, located at the front of the belt body, corresponding to the position of the user's abdomen. When the airbag is inflated, the oppressive feeling generated can remind students to immediately correct their bad sitting posture.

A loudspeaker is arranged at the outer side of the waistband main body, and when the time length exceeds a preset time threshold, the loudspeaker sends out a prompt.

It also comprises a mobile phone intelligent terminal connected with the wireless communication module through a network to acquire the angle information collected by the inclination sensor and master the sitting state of students.

The power supply module adopts lithium battery with USB interface, which can be charged by external power supply.

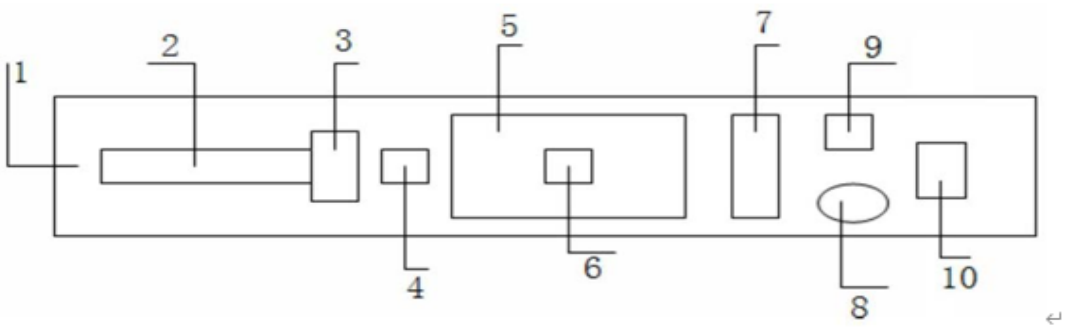

4. Specific implementation mode

This project will be further described in detail with reference to the following drawings and specific examples.

The overall structure of the portable learning sitting posture monitor based on the Internet of Things proposed in this project is shown in the figure, which includes a belt body, on which supporting strips are vertically arranged, which correspond to the position of the user's lumbar vertebrae. The supporting strips are semi-hard aluminum alloy strips, which are located in the middle of the belt body and are used for supporting and protecting the lumbar vertebrae at the back. Meanwhile,Grasp the waist posture information by monitoring the tilt state of the support bar. A tilt sensor (model GY-) is arranged on the support bar, and the output end of the tilt sensor is electrically connected with a controller (model STM). The tilt angle sensor is used to collect the tilt angle variation data of the support bar relative to the vertical plane in real time, and the variation is compared with the preset alarm threshold by the controller.Judge whether the students' sitting posture is correct.

A pyroelectric infrared sensor (model hc-sr) is arranged at the rear of the belt body, and a loudspeaker is arranged outside the belt body.The output end of the pyroelectric infrared sensor is electrically connected with the controller.At the same time, the controller starts to record the learning time when the time exceeds the preset time threshold,The speaker sends out a message.

The front of the main body of the belt is provided with an air bag and a micro air pump. The air bag is in a long strip shape and is located in the front of the main body of the belt, corresponding

to the abdominal position of the user.The output end of the micro air pump is connected with the air bag, and the control end of the micro air pump is electrically connected with the controller.When the controller judges that the student is sitting improperly, it sends out the command to start the micro air pump, which inflates the air bag,The resulting pressure reminds students to sit upright,

The main body of the belt is also provided with a wireless communication module and a power supply module, the controller is electrically connected with the wireless communication module, the power supply module is electrically connected with the inclination sensor, the controller, the micro air pump and the wireless communication module, and the mobile phone intelligent terminal is connected through the wireless communication module.The wireless communication module can be implemented by Bluetooth module, WiFi module or GPRS module.The information of students' sitting posture and learning time is transmitted to parents' mobile phones by wireless communication module through the network. Even if parents are not around, they can also master their children's learning status remotely.The power supply module adopts lithium battery and USB interface.

The system block diagram of this project is shown in the figure. The inclination sensor collects the data of the inclination change of the supporting bar relative to the vertical plane in real time, and sends the collected value to the controller. The controller compares the change amount with the preset alarm threshold value to judge whether the students' sitting posture is correct.In case of improper sitting posture, the controller starts the micro air pump to inflate the airbag at the front of the waist,The resulting sense of oppression can remind students to correct their bad sitting posture immediately.When the students wear the monitor, the pyroelectric infrared sensor senses the human body temperature and transmits the temperature signal to the controller. The monitor starts automatically. At the same time, the controller starts to record the learning time. When the time exceeds the preset time threshold, the loudspeaker connected with the controller will give a prompt.The wireless communication module is connected with the controller, and the mobile phone intelligent terminal is connected through the wireless communication module.

Finally, it should be noted that the above specific embodiments are only used to illustrate the technical solution of the patent, not the limitation. Although the patent is described in detail with reference to a better embodiment, those skilled in the art should understand that the technical solution of the patent can be modified or replaced equivalently without departing from the spirit and scope of the technical solution of the patent,All of them shall be covered in the scope of the claims of this patent.

5. Conclusion

This project is a portable learning sitting posture monitor based on the Internet of things. The device is installed at the waist of students, which is not limited by the application environment, easy to carry and suitable for any place.

This project is based on the Internet of things portable learning sitting posture monitor, through the human body pyroelectric infrared sensor start device, to avoid students forget to open or some speculation.

This project is based on the portable learning sitting posture monitor of the Internet of Things. The posture data of the belt support bar is collected in real time by the inclination sensor to monitor the students' sitting posture. At the same time, the speaker is used to remind students to prevent myopia and even lumbar and cervical problems caused by long-term incorrect sitting posture or long study time.4. This project is based on the Internet of Things (IoT) portable learning sitting posture monitor, which is connected with the mobile phone intelligent

terminal through the wireless communication module. Even if parents are not with their children, it can remotely master their learning status.

Acknowledgements

(Supported by the 2022 Innovation and Entrepreneurship Training Program of University of Science and Technology Liaoning).

References

[1] Development of standardized station terminal public unit based on Internet of Things [J]. Wu Hai, Hu Guo, Wu Yuwei, Huang Qi, Xu Zhihua, Zhou Cheng, Cao Zitao. Electrical Automation .2021 (06).
[2] Cellular IoT sensor solves the problem of hidden pipeline corrosion for hydrocarbon processing industry [J]. Lorenzo Amicucci. World Electronic Components. 2021(11).
[3] Application of Internet of Things technology in smart grid [J]. Xu Guanglu. Science and Technology Innovation and Application .2022 (05).
[4] Analysis of the application of Internet of Things technology in smart grid [J]. Liu Youtang. Digital Communication World. 2020(12).
[5] Design and implementation of the ultra-low-cost family IoT scheme [J]. Dong Chenle, Zhang Fuchun, Yang Yanning. IoT Technology .2020 (12).
[6] Application of Internet of Things technology in building energy management system [J]. Yu Xuehao. New technologies and new products in China .2020 (22).
[7] Application scenario analysis of ubiquitous power Internet of Things based on deep learning [J]. Wang Ailing, Xu Yunhua. Electrical Technology .2021 (04).
[8] Application of Internet of Things technology in smart grid [J]. Rui Liu. Wireless Internet Technology .2021 (04).
[9] Research on the application of Internet of Things technology in industrial automation [J]. Lu Zhengqing, Fang Weilan, Li Xian. Digital Technology and Application .2021 (02).
[10] Application of Internet of Things technology in intelligent building system [J]. Chen Yuxiang. Journal of Hubei Open Vocational College .2021 (08).