ISSN: 2664-9640

Research on the Influence of Throat Distance of Oil Production Jet Pump

Haifeng Ma*, Zhiwu Chen, Ruoyu Wang, Ziyi Zhao

School of Mechanical and Electrical Engineering, Southwest Petroleum University, Chengdu 610500, China.

*Corresponding author: Haifeng Ma

Abstract

As a kind of heavy oil, heavy oil is characterized by high viscosity and low fluidity. Therefore, the process of mining heavy oil is extremely complicated and difficult. At present, one of the main methods of heavy oil exploitation is to use jet pumps for exploitation. On the basis of previous researches on jet pumps, aiming at specific downhole actual working conditions and aiming at improving efficiency, the effect of throat distance on pump performance is studied. The efficiency of jet pumps under different throat distances is compared, and the flow characteristics of the two-phase flow inside the pump are analyzed. The research results show that the throat distance has a great influence on the performance of the jet pump. When the throat distance d=1, the jet pump efficiency is up to 25.22%, which is 2.96% higher than the prototype pump efficiency.

Keywords

Jet pump; throat distance; numerical simulation; optimization analysis.

1. Introduction

As a heavy oil with very high viscosity, heavy oil is distributed all over the world. The jet pump oil extraction method has been used for half a century, and its operation is convenient and the process is simple. But the disadvantage is that the efficiency is not high.

Senthil Kumar et al. used a numerical simulation of the pump throat distance to study and found that when the ratio of the throat distance to the nozzle diameter is 1 to 1.7 times, the jet pump has better performance and higher efficiency[1]. Abdus Samad et al. studied the flow characteristics of the two-phase flow inside jet pumps, using numerical simulation methods and found that when the viscosity and density of the fluid in the pump increase, the pump performance will be reduced, thereby reducing the pump efficiency[2].

The research of comprehensive scholars found that a large number of scholars have done research work on jet pumps, but the main research direction of scholars is liquid-gas jet pumps, and there is less research on jet pumps for oil production. Therefore, this paper studies and analyzes the throat distance, one of the main structural parameters of the oil production jet pump.

2. Principle and structure of oil production jet pump

The jet pump works by energy conservation. When the power fluid passes through the pump nozzle, the power fluid will have a very high speed and flow out from the nozzle outlet. At this time, the pressure in the pump will drop rapidly, thereby sucking the formation fluid around the pump. Into the pump, the power fluid sucked into the pump and the formation fluid are mixed in the pump, and then flow out from the pump after the mixing is completed.

ISSN: 2664-9640

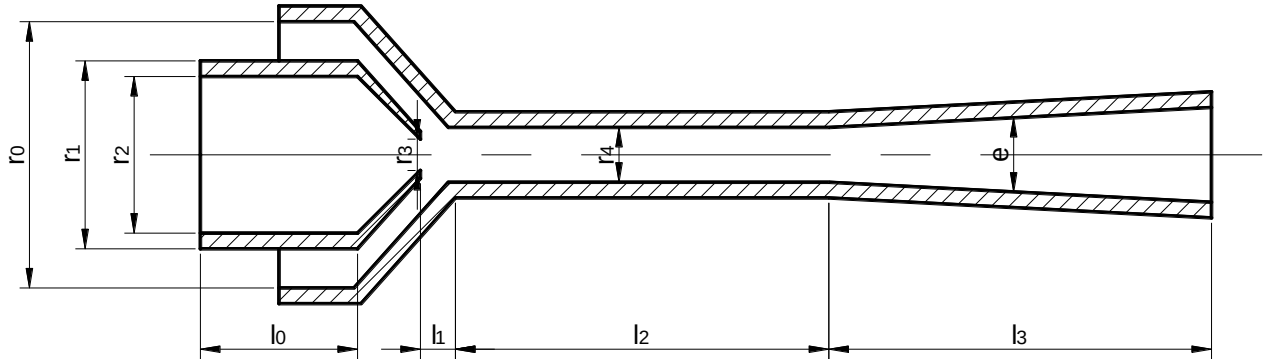

Fig.1 Schematic diagram of jet pump structure

Tab.1 Structural parameters of oil production jet pump

Parameter name	Parameter value
R_0	35mm
R_1	25mm
R_2	18mm
L_0	20mm
R_3	4mm
L_1	5mm
D_4	9mm
L_2	48mm
β	6°
$L3$	48.7mm
m	3
s	6
d	3

3. Calculation model and method

3.1. Meshing

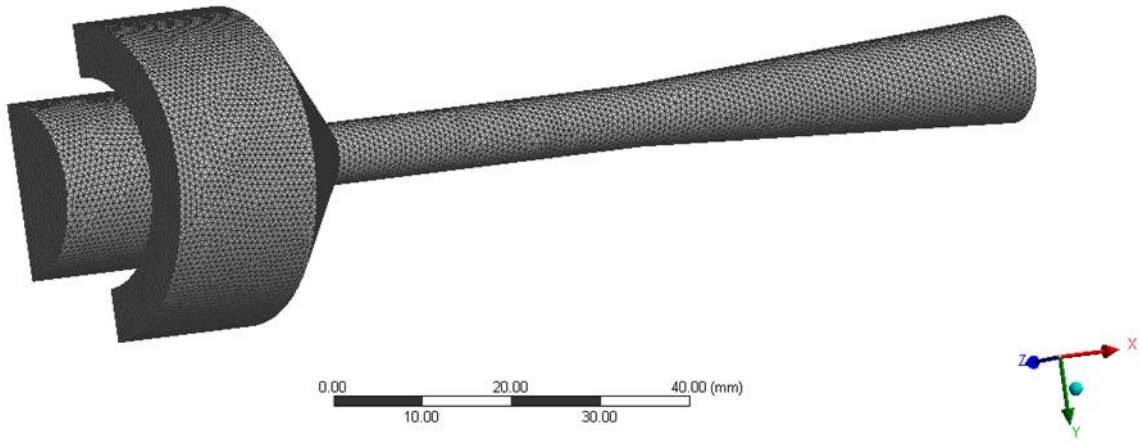

Fig.2 Model meshing

ISSN: 2664-9640

When modeling, consider that the prototype pump is a symmetrical model. Therefore, when modeling, half of the model can be used to divide the four sides and the grid. The grid division result is shown in Figure 2.

In the numerical simulation, the multi-phase flow VOF model is used, and the material physical parameters and boundary conditions of the actual downhole working conditions are used.

4. Numerical simulation and optimization analysis

Throat distance refers to the distance between the outlet of the pump nozzle and the throat. Keep the other structural parameters of the pump unchanged and change the size of the throat distance for analysis.

Numerical simulations of jet pumping with throat distances of 0.5d, 1d, 1.5d, 2d, 2.5d, 3d, 3.5d, 4d are used respectively. Obtain the efficiency curves under different throat distances.

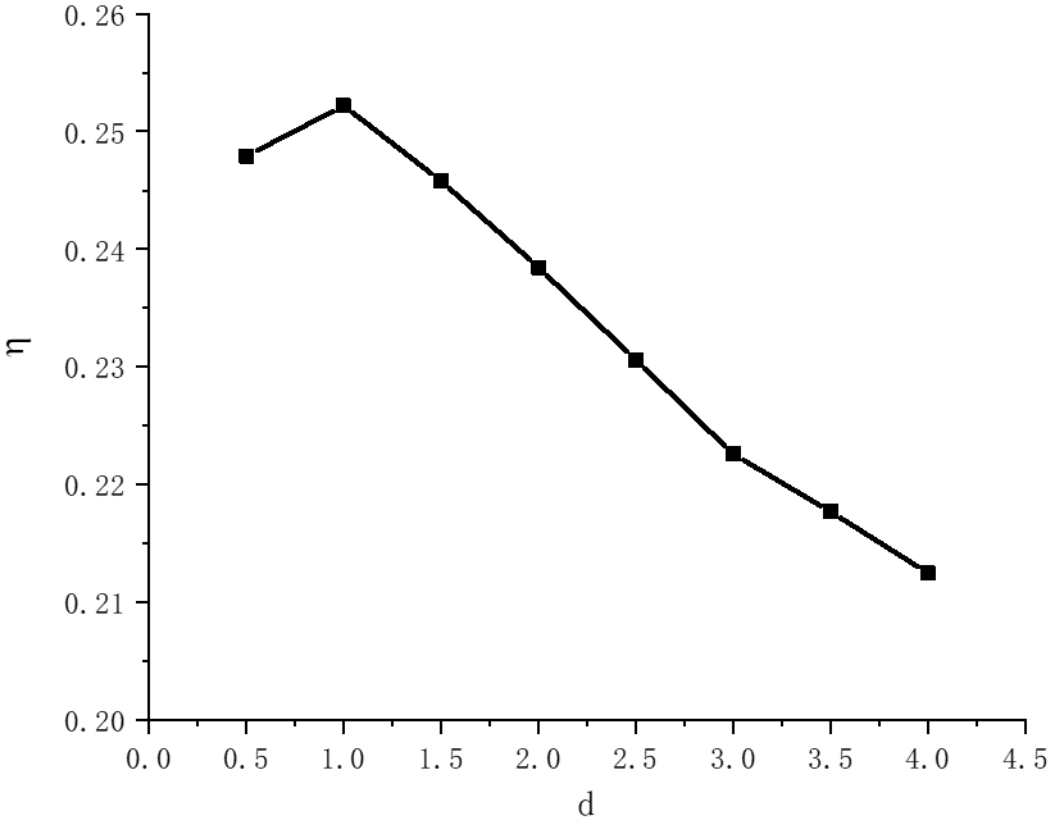

Fig.3 Relationship curve between throat distance and efficiency

It can be seen from Figure 3 that when the most efficient throat distance is 1 times the diameter, the maximum efficiency is 0.2522. Too small throat distance will make the nozzle and throat inlet distance too short, which will lead to poor mixing effect. Too long throat distance will make the power fluid and the formation fluid mixed in the mixing chamber in advance, ecstasy of energy, and will Create a vortex.

ISSN: 2664-9640

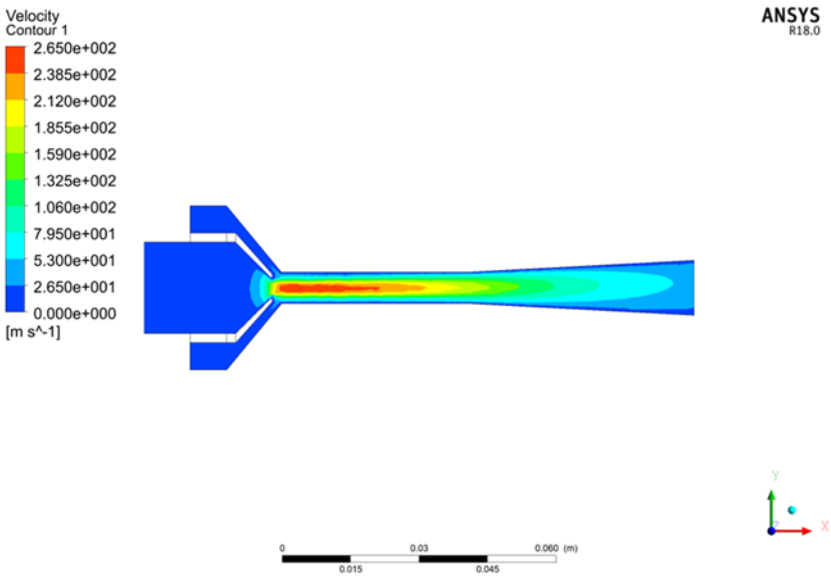

Figure4 The cross-sectional velocity cloud diagram of the jet pump when the throat distance is 0.5d

Figure4 is a cloud diagram on the pump section when the throat distance is 0.5d. It can be seen from the figure that when the throat distance is too short, the high-speed section of the fluid in the pump will become longer, and the pump efficiency will be reduced.

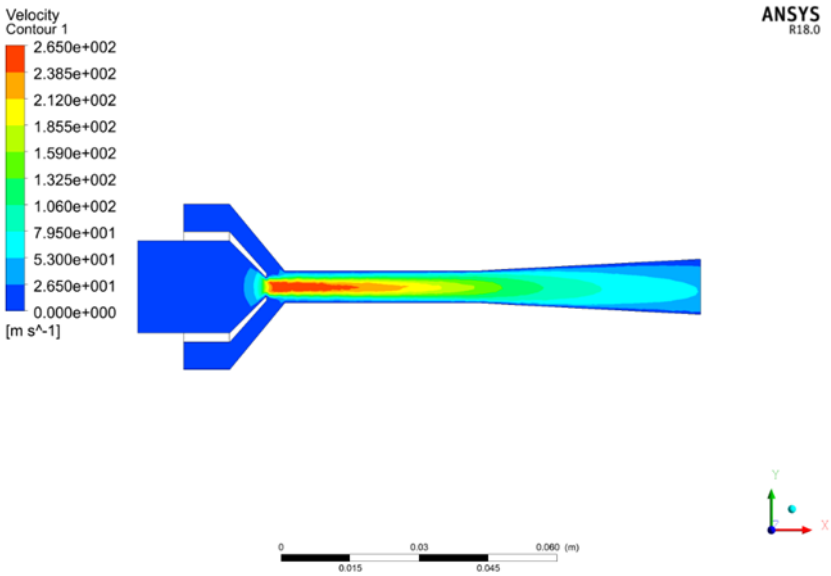

Figure5 The cross-sectional velocity cloud diagram of the jet pump when the throat distance is 1d

Figure5 is a cloud diagram on the pump section when the throat distance is 1d. From the figure, it can be seen that the two-phase fluid is better mixed and the pump efficiency is higher.

ISSN: 2664-9640

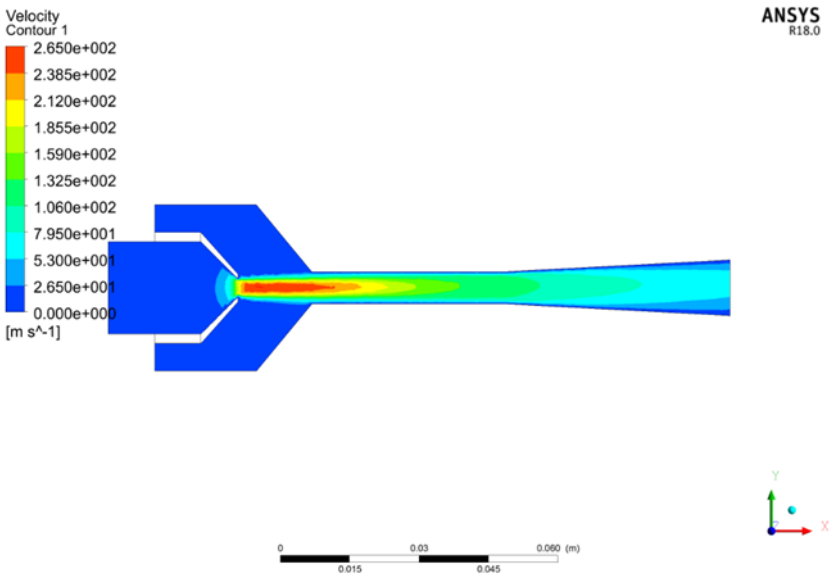

Figure6 The cross-sectional velocity cloud diagram of the jet pump when the throat distance is 4d

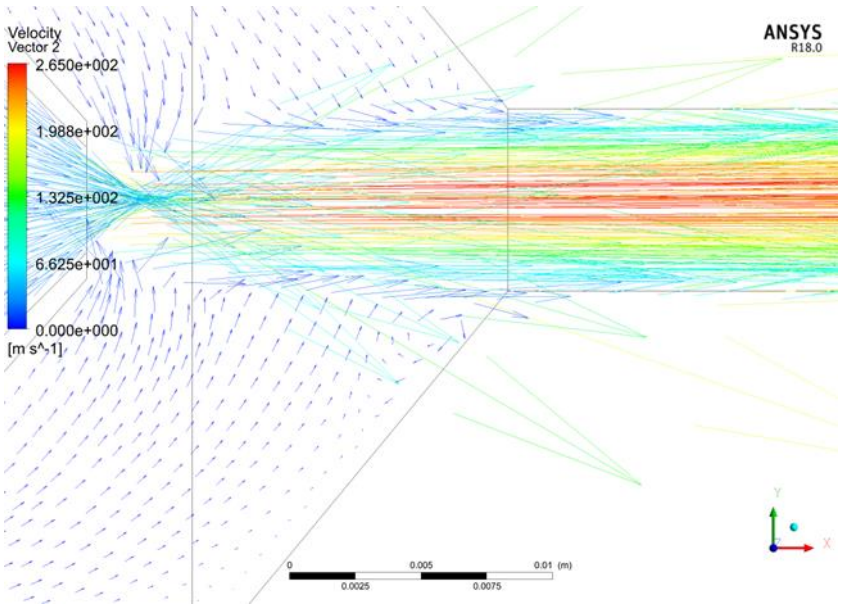

Figure7 A partial enlargement of the velocity vector of the jet pump section when the throat distance is 4d

It can be seen from Figure6 and Figure7 that when the jet pump throat distance is too large, it will cause the motive fluid and the formation fluid to be mixed in the mixing chamber in advance, which consumes energy. At the same time, vortex is generated in the mixing chamber and the pump efficiency is reduced.

5. Conclusion

Using the method of numerical simulation, according to the actual conditions of the downhole, the main parameters of the jet pump are optimized and studied. Get the following conclusions:

(1)When the throat distance d=1, the jet pump has the highest efficiency.

(2)The efficiency of the jet pump before optimization is 0.2225, and the efficiency after optimization is 0.2522, which is 0.0296 higher than that before optimization.

ISSN: 2664-9640

References

[1] Senthil Kumar R,Kumaraswamy S,ManiA. Experim-ental investigations on a two-phase jet pump used in desalination systems[J]. Desalination,2006,204(1):

[2] Abdus Samad,Mohammad Nizamuddin. Flow Anal-yses Inside Jet Pumps Used for Oil Wells[J]. Turbomac-hinery Society of Japan, Korean Society for Fluid Mac-hinery,Chinese Society of Engineering Thermophysics, I-AHR,2013,6(1):