ISSN: 2664-9640

A new energy vehicle air conditioning system based on hydrogen oxygen fuel cell coupled absorption refrigeration and heat pump

Ao Zhang[1], Chaofan Li[2] and Songlin Chen[3]

[1] School of Metallurgy and Energy, North China University of Science and Technology University, Tangshan 063000, China;

[2]School of Metallurgy and Energy, North China University of Science and Technology University, Tangshan 063000, China;

[3] School of Materials Science and Engineering, North China University of Science and Technology University, Tangshan 063000, China.

Abstract

Traditional vehicles drive vehicles with fuel as power. With the revolution of energy technology, electric vehicles gradually enter people's vision, among which hydrogen fuel cell electric vehicles are the end of vehicle development in the eyes of experts in related fields. Fuel cells convert chemical energy into electrical energy with a conversion efficiency of more than 50% to power vehicles, of which nearly half of the energy is lost in the form of thermal energy. The system uses the technology of absorption refrigeration coupled with compression heat pump, linkage cooling system, and takes the waste heat of fuel cell as the energy for refrigeration and heating of air conditioning system. It overcomes the shortcomings of low efficiency of existing new energy air conditioning and poor endurance of fuel cell vehicles, and provides an energy-saving and emission reduction system equipment for fuel cell vehicles. At the same time, two solenoid valves can be used to control the opening and closing of the channel to achieve six different working conditions, reduce the waste heat emission of fuel cell, make more efficient use of heat source, achieve the dual goal of energy conservation and emission reduction, and effectively improve the mileage of fuel cell vehicles.

Keywords

Fuel cell;Air conditioning system;Waste heat;Energy saving and emission reduction.

1. Introduction

The research shows that the exhaust of traditional fuel vehicles powered by fossil energy is one of the important factors of urban air pollution. With the rapid development of new energy vehicles in recent years, ensuring urban air quality and alleviating energy crisis are being implemented step by step. Compared with traditional vehicles, the energy supply mode of air conditioning of new energy vehicles is different. To promote the optimal development of power structure of new energy vehicles, we should further understand the relevant details of air conditioning system of new energy vehicles.

In the ranks of new energy vehicles, pure electric vehicles mostly use compression heat pump air conditioning, such as Tesla Model Series. However, due to its special working principle and the limitation of Carnot cycle, the working efficiency of this type of air conditioner is greatly reduced in northern areas and low temperature seasons, and the heating effect is not ideal. In this case, the auxiliary heating is mostly combined with PTC electric heater to meet the temperature demand in the compartment and achieve better vehicle thermal management. However, its disadvantages are also exposed, that is, it seriously reduces the range of vehicles in the north and winter, seriously affects the vehicle driving experience, and causes redundant

and unnecessary economic expenditure. The difference is that in the fuel cell new energy vehicle, the waste heat of the fuel cell can be used as the energy of the absorption refrigeration and air conditioning system, and the compression heat pump can be coupled to meet the needs of greater compartment heat management, which greatly saves electric energy, minimizes the energy consumption of the air conditioning system, ensures the mileage of the whole vehicle, and achieves the goal of energy conservation and emission reduction.

2. Introduction of new air conditioning system based on fuel cell

2.1. Design Principle

The schematic diagram of the new energy vehicle air conditioning system based on hydrogen-oxygen fuel cell coupled with absorption refrigeration and heat pump is shown in Figure 1. The coolant with high boiling point and high specific heat capacity supplies the waste heat dissipated from the fuel cell and motor to the absorption refrigeration system and heat pump system to improve the efficiency of air conditioning and heating of the whole vehicle. It realizes six working conditions, reduces fuel cell waste heat emission while using heat sources more efficiently, improves energy utilization and increases range.

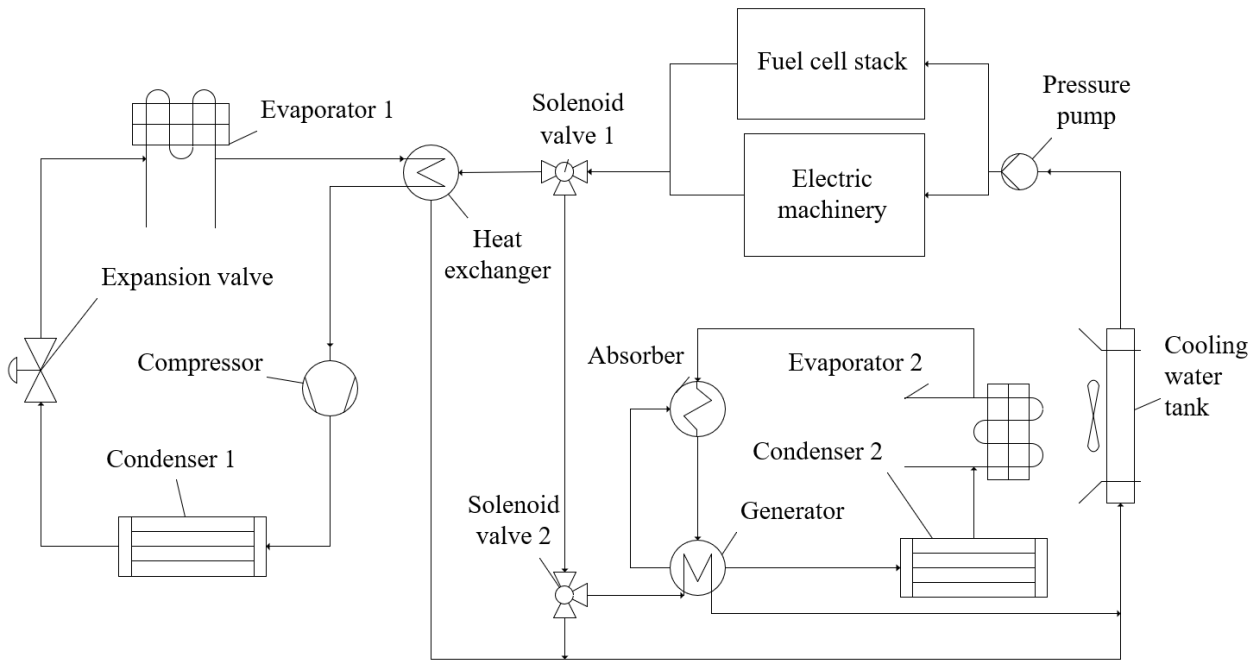

Figure 1 Sketch of design principle

2.2. Six types of working conditions probable analysis

When cooling is required in the compartment, two operating conditions of the system exist.

The cooling system and absorption refrigeration system are activated, the cooling is provided through the evaporator, if the heat provided by the coolant is greater than the heat required by the absorption refrigeration system, the excess heat is dissipated through the cooling water tank, the cooling system circulation circuit is: pressure pump - shunt in the fuel cell, motor - merge in the solenoid valve 1 -Solenoid valve 2 - cooling water tank - pressure pump; absorption refrigeration system circuit: generator - shunt in the condenser, absorber - evaporator - combined flow in the absorber -generator; at this time, solenoid valve 1 and solenoid valve 2 are connected only two ways.

If, on the basis of the above, the cooling capacity is less than that required by the car, the compression heat pump system will be activated to provide cooling through the evaporator and the No. 1 evaporator, and if the heat provided by the coolant at this time is greater than that required by the absorption refrigeration system, the excess heat will be dissipated through the heat sink, and the cooling system circulation circuit will be: pressure pump - shunt in the fuel cell, motor -Merge in solenoid valve 1 -Shunt in evaporator 2, solenoid valve 2 -Merge in cooling water tank -pressure pump; absorption refrigeration system circulation circuit: generator - Shunt in condenser, absorber -evaporator - combined in the absorber - generator; heat pump system circulation circuit is: No. 1 evaporator - compressor - condenser - expansion valve - No. 1 evaporator box; at this time, solenoid valve 1 and solenoid valve 2 three-way connection.

When heating is required in the compartment, there are two operating conditions of the system.

Enable the cooling system to provide heating through the No. 2 evaporation tank, cooling system circulation circuit: pressure pump - shunt in the fuel cell, motor - combined flow in solenoid valve 1 - No. 2 evaporation tank - cooling water tank - pressure pump; at this time solenoid valve 1 is connected only in two ways.

If, on the basis of the above, the heat production is less than the amount required by the car, the compressed heat pump system is activated to provide heat production through the No. 2 evaporator tank and the said condenser; the circulation circuit of the cooling system is: pressure pump - diversion in the fuel cell, motor - combined flow in the solenoid valve 1 - No. 2 evaporator tank -cooling water tank - pressure pump; heat pump system circulation circuit is: No. 1 evaporator box - compressor - condenser - expansion valve - No. 1 evaporator box; at this time, solenoid valve 1 only two ways connected.

When there is no thermal management demand in the compartment, two operating conditions of the system exist.

The cooling system is activated, through the cooling water tank, the cooling system circulation circuit is: pressure pump - shunt in the fuel cell, motor - combined flow in solenoid valve 1 - solenoid valve 2 - cooling water tank - pressure pump; at this time the said solenoid valve 1 is connected only in two ways.

If, on the basis of the above, the heat dissipation is less than the heat produced by the fuel cell and the motor, the heat pump system is activated, and the heat is dissipated through the heat exchange of the No. 2 evaporation tank and the heat dissipation water tank, and the circulation circuit of the cooling system: pressure pump - diversion in the fuel cell and motor - combined flow in the solenoid valve 1 - No. 2 evaporation tank -Cooling system circulation circuit: No.1 evaporator box - compressor - condenser - expansion valve - No.1 evaporator box; at this time, solenoid valve 1 is only two-way connected.

3. Innovative implications of a new fuel cell-based air conditioning system

This system is a fuel cell-based coupled air conditioning system, so it can make full use of the waste heat from the fuel cell to supply the absorption cooling and heat pump system, improve energy utilization, reduce energy dissipation, and reduce the impact of the power consumption of the air conditioning system on the vehicle range.

In the existing technology, heat pump systems are usually used with PTC electric auxiliary heat cooling and heating, this system uses absorption cooling and heat pump systems, which can achieve multi-state operation in special environments to meet the different thermal management needs of the car, but also to improve the range and achieve the purpose of energy saving and emission reduction.

4. Future development trend and outlook

The world is currently experiencing a decline in economic development due to the epidemic, but it does not affect the development of pure electric vehicles in the world market, led by Tesla, and in the domestic market, led by brands such as BYD and Hyundai, which are surging year by year. Traditional fossil energy will be depleted in the next few decades or centuries, so energy saving and emission reduction, the development of new energy is imminent. In terms of people's travel and transportation, there will be an inevitable big change. Future transportation will undoubtedly be powered by lithium batteries and fuel cells as the energy supply method. The power consumption of the air conditioning system has a non-negligible impact on the range of electric vehicles.

This system is future-oriented and innovative compared to the current conventional type of compressed heat pump air conditioner with PTC heating element. It uses the chemical reaction characteristics of fuel cells for energy saving and emission reduction innovation, and contributes to the development of fuel cell vehicle air conditioning system.

Under the general trend of world economic recovery in the future, countries around the world will focus on supporting the innovation of fuel cell related product design and promoting the development of related industrial chain. Currently, the Mirai series launched by Toyota in Japan is leading the rapid development and innovation of this industry as the world's top fuel cell vehicle. It is believed that in the near future, the air conditioning system of fuel cell vehicles will be constantly updated and improved, thus promoting the continuous development of new energy vehicle air conditioning technology and realizing the sustainable development of energy in the world.

References

[1] Ma Hongtao,Zhao Pengcheng,Li Yachao,Wu Bing,Wang Jie,Wu Jiawei. Research on the cooling performance design of fuel cell vehicle air conditioning system[J]. Shanghai Automotive, 2013(06):21-24.

[2] Zhang Ke-Run. Research on air conditioning system of fuel cell vehicle[J]. Shandong Industrial Technology,2014(19):51.DOI:10.16640/j.cnki.37-1222/t.2014.19.099.

[3] Zhang Shangqun. Application of absorption refrigeration to automotive air conditioning[J]. Clean and Air Conditioning Technology,2015(03):95-98.

[4] Chen Lin. Research on the working principle and overhaul project of new energy vehicle air conditioning system[J]. Internal Combustion Engine and Accessories,2020(06):168-169.DOI: 10. 19475/ j.cnki.issn1674-957x.2020.06.086.

[5] Wang Rong, Wang Tie, Zhao Zhen, Li Meng, Wang Heng, Cai Long. Development and design of thermal management of fuel cell vehicle based on heat pump air conditioning[J]. Journal of Chongqing University of Technology (Natural Science),2021,35(01):58-66.

[6] Wang Rong. Research on integrated thermal management system of heat pump air conditioning and power system for fuel cell vehicle[D]. Taiyuan University of Technology, 2020. DOI: 10.27352/d.cnki.gylgu.2020.000591.