ISSN: 2664-9640

Vehicle borne air pollution detection system based on Arduino

Yuan Li, Qingliang Guo

School of physics and electronic engineering, Taishan University, China

Abstract

With the acceleration of urbanization, the domestic air pollution situation is becoming more and more serious. In view of the above, we innovatively designed an Arduino-based vehicular air pollution detection system. Relying on the vehicular terminals of urban vehicles and special monitoring vehicles and the characteristics of random road operation, we can accurately obtain the atmospheric quality data of vehicle trajectory points and realize the high-precision vehicular air pollution detection on the whole urban road network. Real-time view and understand the road air quality and environmental supervision department to the pollution source assessment and treatment.

Keywords

Pollution prevention , Vehicle-mounted atmospheric monitoring , singlechip , Internet of Things.

1. Introduction to system functions:

The monitoring system is mainly as a kind of intelligent vehicle system of atmospheric particulate pollutants such as automatic detection, by an on-board atmospheric particle pollution detection module, GPS module, GSM mobile communication system beidou double positioning module and a microprocessor controller, atmospheric particle pollution detection analysis module can be used for vehicle real-time particle pollution data collected, and be able to Will have receives the vehicle pollution data in real time automatically sent back to the vehicle micro controller, microprocessor controller can receive real-time acquisition to the car by the current atmospheric particle pollution, automatically collecting signal processing, storage and analysis result of processing can be directly through the cellular mobile communication module is directly transmitted to the cloud server, GPS positioning module will position on the vehicle Then, the cloud server can calculate and form a direct map of road traffic flow pollution degree, which can display the traffic flow and air pollution degree of the vehicle location in real time. According to the traffic flow, the traffic department can use big data to intelligently control the traffic light system and improve the local air pollution caused by traffic congestion. When the traffic density in this area is too high, the cloud server platform reduces the local vehicle congestion by shortening the waiting time at the red light, so as to reduce the air pollution in this area. The system can detect the amount of pollutants in the air in real time. To carry out regular monitoring and evaluation of urban air quality enterprise and integrated management, strict environmental controls and the completely according to the regulations of the green emission enterprise standards for pollution discharge, once its emissions, automatic excessive warnings for environmental monitoring analysis system to system, local managers will be at this time can be effectively controls on its emissions, pollution violations of relevant enterprises The situation of exceeding the standard should be dealt with quickly and effectively, so as to achieve the positive role of controlling and improving the local environmental pollution problem chain.

ISSN: 2664-9640

2. The overall structure and principle of the system

Vehicle air pollution detection system based on Arduino is an important innovation and improvement measure in air pollution control. Its design part includes four parts: vehicle monitoring module, GSM communication system module, GPS Beidou dual positioning module and cloudAPP.

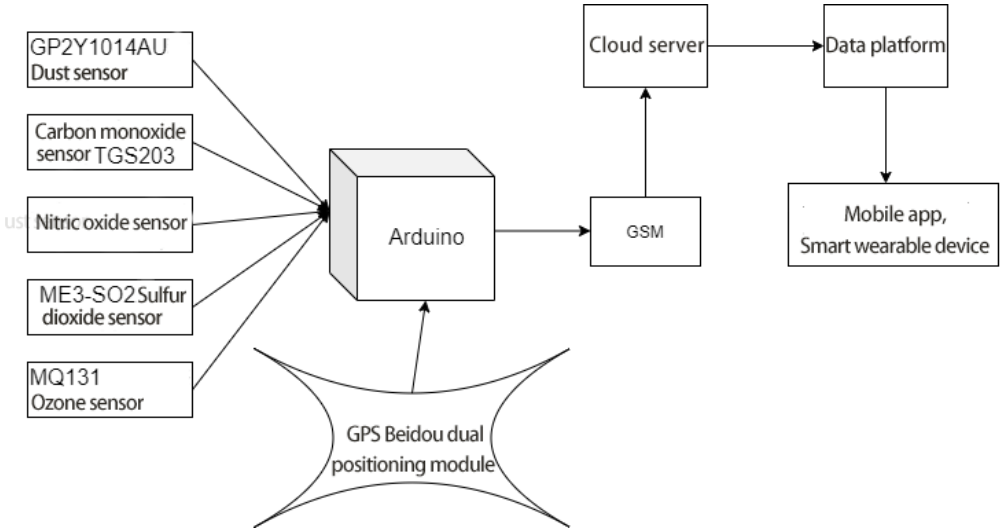

FIG. 1 System design structure diagram

Done for the first time, after the completion of equipment installation, system initialization, the system will pollute the signal data collection, real-time automatic transmission and upload to the cloud for algorithm analysis, at the same time use has set warning threshold devices atmospheric pollution real-time feedback, in-car air pollution monitoring module will be collected by the data and precision has set warning threshold contrast, determine whether to alarm feedback.

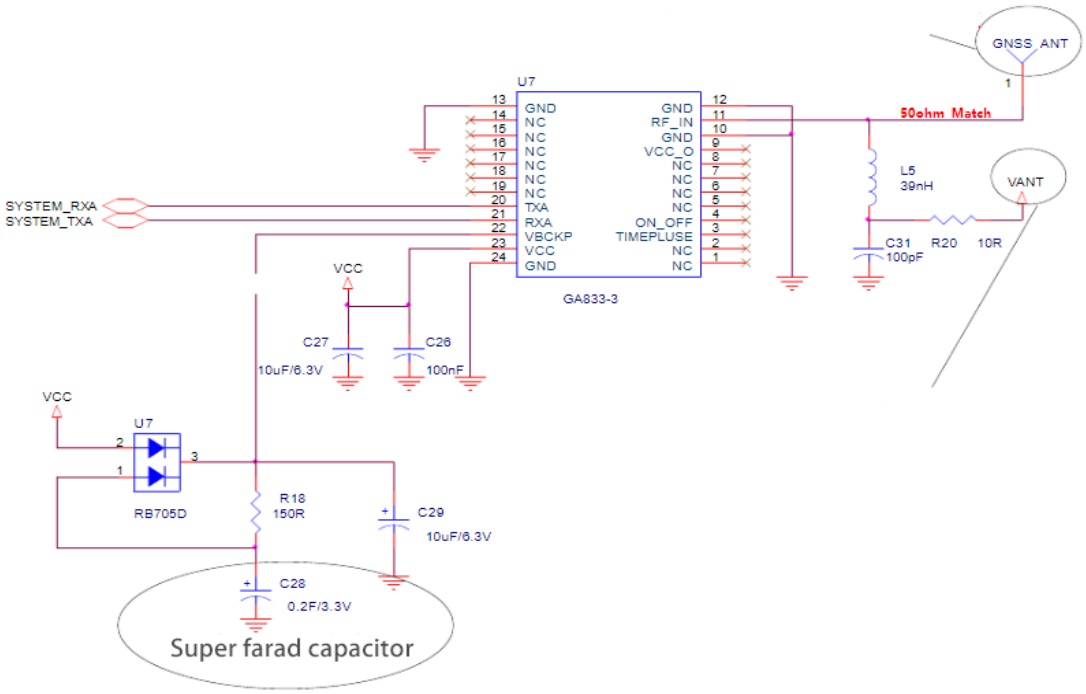

Figure 2 Line of Beidou GPS dual-mode positioning module

ISSN: 2664-9640

The processor uses Arduino controller, and the atmospheric particulate matter processing sensor module uses GP2Y1014AU sensor. The output OUT pin can be directly connected and connected with the UNO microcontroller PD3 pin of single chip microcomputer at the same time. The average concentration information of atmospheric particulate matter is comprehensively processed to realize the comprehensive detection and judgment of the content of pollutants in the air. The transmission line routing sensor group collects data, converts chemical signals into electrical signals, and transmits them to Arduino microcontroller for signal processing. Then the GSM module connects to the network to transmit data. The GPS positioning module uploads the vehicle location, and forms a visual map of the pollution degree of road traffic flow through cloud computing. In this way, the traffic flow and air pollution level of the vehicle location can be displayed in real time, and the whole road network can be monitored. Among them, by setting the transmission frequency of GSM/GPRS module, the data communication traffic can be effectively reduced, and the use cost can be reduced. As for the client, we have designed an APP supporting the vehicle monitoring equipment by ourselves, which can visualize complex and difficult data, and apply the warning threshold design to timely feed back to the user, so as to promote the fine and systematic management of air pollution prevention and control.

3. Conclusion

This design adopts the embedded and mobile design, application of positioning technology, GSM/GPRS communication by collecting city motor vehicle and special vehicle terminal trajectory point of monitoring vehicle air quality data, precision lock road environment air pollution source, realize the whole road network covering monitoring, at the same time through the warning threshold design module to the severe pollution environment real-time warning, And the information will be transmitted to the cloud service platform for later pollution source analysis. This design effectively solves the problem of fixed location of existing monitoring stations and monitoring blind areas, greatly reduces the cost of manpower and material resources, and pushes the prevention and control of air pollution to systematic and fine management.

References

[1] Jiao Dezhi, Fan Zhenqian, Wu Jian, Wang Hui, Xu Jian. Information Technology and Informationization. 2021(06).
[2] Design and Implementation of Data Collector for Internet of Things Based on Arduino [D]. Meng Meng. Beijing University of Technology 2016.
[3] Design and Implementation of GPS satellite Positioning System [J]. Journal of Shenyang University of Technology. 2004(02).
[4] SCM Principle and Application Design [M]. Publishing House of Electronics Industry, Zhang Yigang, 2015.