ISSN: 2664-9640

CenterResearch on control system of small quadcopter

Yan Sun [a], Chunhui Li [b] and Haibin Fang [c]

Shenyang Institute of Technology, Shengyang 210000, China;

[a]24615862@qq.com, [b]331442106@qq.com, [c]63245717@qq.com

Abstract

Common small aircraft usually include fixed-wing aircraft, helicopter and multi-rotor aircraft, among which small and medium-sized four-rotor aircraft is the mainstream of the market. The basic functions of consumer small quadrotor aircraft include video shooting, autonomous flight and autonomous obstacle avoidance. With the increasing market demand of small rotorcraft and the continuous progress of components and control technology, the design of small quadrotor is oriented to the development of higher picture quality video capture, portable, long endurance, higher autonomy obstacle avoidance flight and other aspects.In this paper, the flight control system is based on STM32 series processor and MPU-6050 inertial measurement device. NRF24L01 wireless module was used to establish the connection with the remote control equipment, and the hollow cup motor was driven by PWN by PID control method to realize the rotation of the four propellers of the four-axis aircraft. Then write and design the program code of the control system and remote control of the four-axis aircraft. The prototype was made and the flight experiment was carried out. The parameters of the aircraft were modified and debutted many times through the actual flight situation, and the stable flight of the four-axis aircraft was finally realized.

Keywords

Small four-axis aircraft; STM32F103CB; PID; RTX. WFT07; MPU6050 motion processing sensor.

1. Introduction

Quadcopter is a new uav with novel structure and excellent performance. The quadcopter has a wide range of applications in military, industrial and civil fields. It can be used in reconnaissance and surveillance on the ground battlefield, safety inspection, post-disaster search and rescue, urban traffic patrol and many other fields. Quadcopter also has the characteristics of strong adaptability, low cost, simple maintenance, strong repeatability and accident cost, so the research of quadcopter is of great significance. Overall design of small quadcopter system

At present, with the development of SCM technology and sensor technology, more and more research has been done on the four-axis aircraft in the innovative practice activities of college students. Various design schemes and application scopes have their own characteristics, some focus on the study of mechanical structure, some focus on the control algorithm. This paper introduces a hardware system design scheme of four-axis aircraft based on STM32F103CB.

2. Overall design of small quadcopter system

This small quadcopter uses STM32F103CB as the main control chip, adopts quaternion, PID control algorithm and RTX real-time operating system to control its attitude. All kinds of complex motion can be realized by adjusting the speed of four rotor motors in real time during flight. Through MPU6050 motion processing sensor acquisition and other sensors installed on

ISSN: 2664-9640

the four-axis aircraft concurrent processing, acquisition of four-axis real-time flight attitude, battery power and other information. The remote control part of the quadcopter adopts wireless communication module WFT072.4ghz.

3. Hardware design of small quadcopter

3.1. Main Control Module

The main control module of the four-axis aircraft adopts STM32F103CB chip. This series of chips adopts armcoreTex-M3 kernel, which has the advantages of low power consumption and super high speed. During the operation of the four-axis aircraft, STM32 will compare the remote control command data received by the four-axis aircraft with the current attitude and the target attitude. Output the corresponding PWM wave to the motor drive module, so as to achieve attitude adjustment.

3.2. Motor drive module

The motor driving module is different from ordinary MOS tube components. For the brushless motor used by the quadcopter, an electronic governor should be designed separately as the motor driving module, and switching frequency characteristics should also be considered. Different working frequency components should be selected according to the motor control rate.

The notice of flight attitude such as lifting, hovering, pitch and roll of the quadcopter is completely realized by controlling the change of speed of the four motors. In order to make the whole body torque balance, the use of positive and negative propeller design, that is, a pair of diagonal propellers are the same, the adjacent two propeller blades are opposite, so that in normal flight, two propellers are turning and two propellers are reversing, the torque of the motor offset, can avoid the aircraft spinning. When the lift force generated by increasing the rotational speed of the propeller is greater than the weight of the aircraft itself, the aircraft can fly off the ground. When the rotational speed of a pair of propellers on the diagonal is different, the body tilts at an Angle to generate a horizontal component to push the aircraft to translate. The flight speed can be controlled by the pitch Angle and the rotational speed of the motor.

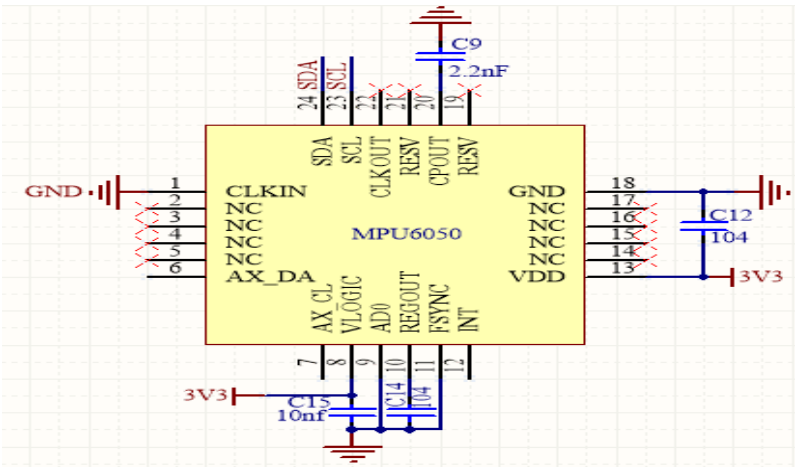

Fig 1 Motion processing sensor of quadcopter

3.3. MPU6050 motion processing sensor

MPU60X0 is inven Sence's first 9 axis motion processing sensor in the world. It integrates a 3-axis MEMS gyroscope and a 3-axis MEMS accelerometer, and can be connected to a third-party data sensor, such as a magnetometer, through the I2C interface (note that the interfaces are XDA and XCL, while the development board communicates with the MPU6050 through SDA and SCL) to expand into a 9-axis data output. The MPU6050 has a built-in 1024-byte fifo buffer,

ISSN: 2664-9640

programmable acceleration range and gyroscope range, programmable interrupt, and i2c communication using 400khz fast mode.

3.4. Aircraft motor selection

Do the motor of the four-axis aircraft is mainly brush motor and brush motor. The motor of the quadcopter is usually brushless DC motor.

When the motor works, the coil and commutator rotate, while the magnetic steel and carbon brush do not rotate. The alternating change of the direction of the coil current is completed by the commutator and brush that rotate with the motor. In the electric vehicle industry brush motor is divided into high speed brush motor and low speed brush motor. There are many differences between brushless motor and brushless motor. As can be seen from the name, brushless motor has carbon brush, while brushless motor has no carbon brush.

Brushless DC motor is composed of motor body and driver. It is a typical mechatronics product. Because brushless DC motor is operated by automatic control, it will not add another starting winding on the rotor as synchronous motor with heavy load under variable frequency speed regulation, and will not produce oscillation and out-of-step when the load changes.

Brush motor is a traditional product with stable performance. Brushless motor is an upgraded product, its life performance is better than brush motor. However, its control circuit is more complex, and the aging screening requirements of components are more strict. Although the motor has a long life, the control circuit is prone to failure. Therefore, the selection of brushless motor must go through strict reliability test to ensure quality, but with the continuous upgrading of technology a few steps, brushless motor technology has been quite mature.

In the actual production process, because brush-toothed DC motor is a high-speed motor, the teeth of the gear are small, easy to wear, but the strength is large, climbing ability is strong. And brushless DC motor, in the use of the process of eliminating two or three years of carbon brush trouble. But because of the process of controlling brushless motor, high precision is required. Also, the price of brushless motor controller is higher. In contrast, brushless and toothless DC motor, although the carbon brush needs to be replaced, it is very easy to replace the carbon brush, and the motor control is relatively simple, the motor runs smoothly, and the safety factor is high.

Brush motor refers to the motor is dc input, control its controller only to provide it with the size of the current can speed; The brushless motor is actually a three-phase AC motor, relying on the controller to convert the direct current into three-phase AC, and according to the sensor hall components in the motor for commutation to normal operation of the motor. Directly speaking, brushless motor than brush motor long life, starting power saving, but the controller is higher than the cost of brush controller.

4. Design of quadcopter software

The software design process of the four-axis aircraft control system is shown in the figure. After the controller is powered on, the clock and port of the single-chip microcomputer are initialized first, and then the work of each sensor is judged to be normal. If there is a fault, the corresponding indicator light or buzzer will alarm. Then perform initial calibration on the sensor module. After the calibration, judge the instructions received by the wireless module from the controller and select the corresponding control algorithm according to the instructions. Ging calculates the speed of the four motors and sends the information to the electrical modulation module through the I2C interface, and then return to the judgment instruction. For safety, the latex battery quantity is monitored during the control working cycle. When the battery voltage of the system is too low, an alarm is given and the aircraft is forced to land.

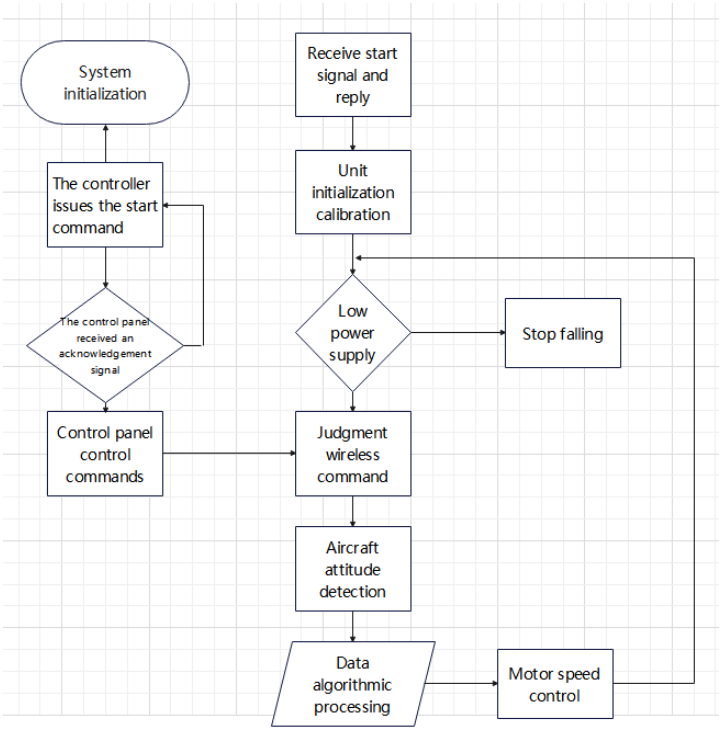

Fig2 Software flow chart

5. To summarize

Based on the specific requirements and difficulties of the hardware design of the flight control system of the small quadrotor aircraft, this paper completes the engineering practice of the hardware design of the flight control system of the small quadrotor aircraft by combining the design optimization and verification test of relevant units. The research in this paper provides practical reference for the design of small quadrotor flight control hardware in engineering. This scheme is proved to be feasible and provides a good platform for the next project research.

References

[1] Wang Zengcai, Xu Li, Liu Qi, Zhou Jimin, Shi Yecheng. Research on control System of quadcopter [J]. Digital World,2018(04):89.
[2] Yachuan Wang, Yan Yang, Liang Han, Dongwei Sheng. Science and technology information, 2018, 16(12):94-96.
[3] A low-cost indoor positioning system for quadcopter based on image processing and neural network [J]. Radio engineering,2018,48(09):759.