ISSN: 2664-9640

Reliability analysis of automobile braking system

Xingyao Si, Yinghua Liao

Sichuan University of Science & Engineering, school of mechanical engineering, Sichuan 644000, China

Abstract

Automobile braking system is one of the most important systems of automobile, which also directly affects the braking performance of automobile. With the continuous improvement of the automobile industry and people's living standards, the number of cars has increased rapidly. With the increasing complexity of automobile structure, various safety accidents are increasing year by year. More and more people pay attention to automobile safety awareness, and automobile braking system directly affects the safety of driving and parking reliability. Therefore, the reliability research and analysis of automobile braking system is of great importance.

Keywords

Automobile; Braking system; Reliability research; Analysis.

1. Research significance of automobile braking system

In the vehicle's dynamic performance, braking performance and handling stability performance requirements, [1] [2] braking performance is a crucial performance in the whole driving process, which is directly related to the driver's driving safety and passenger's driving safety, so it is very important to study the braking efficiency of automobile.

The safety of automobile braking is mainly related to the ground conditions, the brake structure and the material of the brake pair. The most intuitive embodiment is the relationship between its braking evaluation index and its braking distance, so we should try our best to explore the factors that affect the braking distance, that is, to explore the influencing factors of braking efficiency, and then optimize [3].

The composition of modern automobile braking system mainly includes four parts, which are energy supply device, control device, transmission device and brake [4]. The main purpose of the energy supply device is to control the braking energy, the purpose of the control device is to control the braking and achieve the purpose of parking, and the purpose of the transmission device is to transmit the braking energy to the braking wheel, and then directly brake through the brake, so as to achieve the braking demand and meet the driving safety [5] [6] [7].

The distribution of front and rear braking force is also an important part of automobile braking, which will lead to the safe distribution of automobile braking force under certain road conditions. Therefore, the optimization of braking force distribution ratio is also an important part in the optimization of automobile braking efficiency.

2. Reliability analysis of automobile braking system

2.1. Main factors affecting automobile braking system

Pavement and environment

Through figure 1 Analysis of the car braking force, we can know that the road condition is closely related to its adhesion, in a good road, the car's adhesion coefficient is higher, so the braking effect will be better. When in the sand or mountain, the adhesion coefficient of the road

is not enough. Although the braking torque of the brake is high, the ground brake force provided by the road is insufficient. Finally, the braking distance of the car can only be determined by the friction of the road, which will greatly affect the braking efficiency, increase the braking distance, and reduce the driver's safety. When the weather is bad, such as rain or snow, the adhesion coefficient of the car on the road will also be reduced, which will reduce the braking efficiency of the car and affect the safety of the driver. And the different tire structure will also have a great impact on the braking efficiency of the car, such as the tread width of the car, the cord level of the tire, the section height of the tire and the tread of the tire.

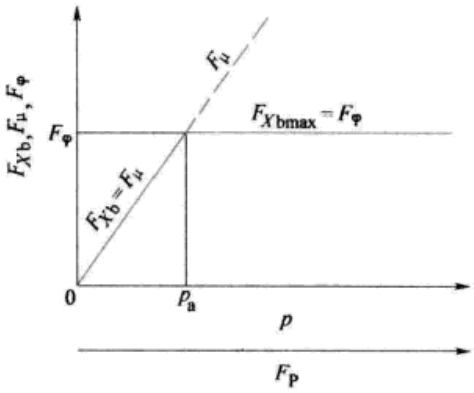

Fig. 1 Relationship among ground brake force, braking force and adhesion during braking

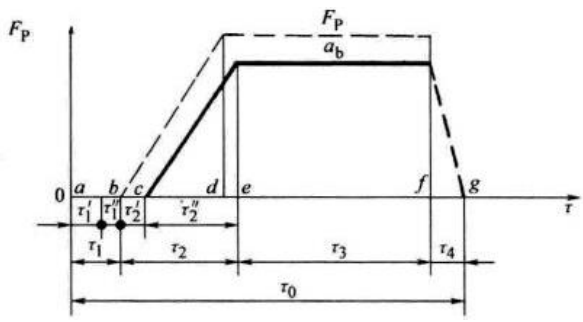

Fig. 2 Schematic diagram of brake working time

Vehicle speed

The braking distance of a car is directly proportional to the square of the driving speed of the car. When braking on dry and hard roads, because the speed increases very fast, the tire has no time to mesh with the rough road surface, so the adhesion coefficient will decrease in this case. On the wet road, when the speed is too high, because the car will have the phenomenon of water skiing, so the adhesion will be sharply reduced, or even no adhesion, at this time, if the brake, or a little jitter, the car will slip, loss of braking effect. If the initial speed of the car is relatively high, the inertia force of the car will be too large when braking, and the braking distance will be increased.

Vehicle load

Car loading and car braking also have a great impact. When the total mass of the car increases, the inertia force of the car will increase. At this time, when the car brakes, when other variables remain unchanged, the braking efficiency of the car will be improved appropriately with the decrease of the mass. For the vehicle loading, we should strive to make the left and right mass of the vehicle uniform, if the left and right load is not uniform, the braking will produce a large pitch angle, that is, the braking may produce a brake nod. When the left and right loads are not uniform, the left and right braking forces of the car are not equal. At this time, braking will cause

the swing of the braking, resulting in brake deviation and loss of directional stability. If the initial speed is a little higher, it is likely to cause rollover and other dangerous working conditions.

Driver's physical fitness

τ_1' ——Driver response time

τ_1'' ——Time to overcome brake clearance

τ_2, τ_3, τ_4 ——Brake time

Through the analysis of Figure 2, it can be seen that the physical fitness and reaction speed of the driver will affect the braking efficiency of the car. Slow reaction will increase the braking reaction time of the car. At this time, the car will drive according to the initial speed, which will lead to long braking distance and dangerous working conditions. When the driver drunk driving or other conditions will increase the driver reaction time will affect the car's braking.

2.2. Technical status of automobile braking system

The different brake structure has a great influence on the braking performance

Here the caliper disc brake as an example for detailed analysis. Fixed caliper type is a kind of caliper disc brake, the main advantage is that there are no other components except piston and brake pad components, so it is easy to ensure the stiffness of brake caliper; the structure and manufacturing process are the same as that of other wheel cylinders, so it is easy to realize its transformation and adapt to the distribution of new pipeline system. The main disadvantage is that on the one hand, the size of the brake is large, on the other hand, it increases the chance of brake friction heating, so that the brake fluid is easy to vaporize, making the car lose braking efficiency [6]. For the floating caliper type, the brake fluid is not easy to vaporize because of its small axial size, less oil circuit and oil sleeve, and good cooling conditions. So as to ensure the stability of braking efficiency.

Different types of brakes will also affect the braking performance

Drum brake can't brake for a long time, because it is easy to produce heat recession phenomenon, so the stability is not good, but because of its own structure, the sensitivity of braking response is high, and for disc brake, the stability of braking is its biggest advantage, and the braking efficiency is not low.

The influence of manufacturing technology and assembly of automobile brake

When the friction between the brake discs and the wheel hub of the left and right wheels is not uniform, it may lead to the unequal braking torque of the left and right wheels, which may lead to the phenomenon of brake deviation.

Distribution of automobile brake pipe system and types of automobile brake

If air pressure braking is used, the air pressure transmission is slow, which will increase the braking time of the vehicle, thus increasing the braking distance of the vehicle, and affecting the braking efficiency. Compared with air pressure braking, hydraulic braking is stable and efficient. And it will have a great influence on the braking of the same type of different pipeline system. The pipeline system of automobile can be divided into HH- type, II-type, LL-type, X-type and HI-type. For HI, LL and HH models, the residual braking force can reach half of the normal value after any brake circuit failure, but it is easy to lock up. For type II, any circuit fails, either the control stability is lost during braking, or the dangerous conditions of locking, dragging and sliding, and even turning over will occur. For the X-type, although a circuit fails, it still has half of the braking force, but it may cause deviation phenomenon, so the braking system circuit should choose X-type better.

Area of brake pad and brake friction plate

ISSN: 2664-9640

When braking, the area of the brake pad and the brake friction plate will affect the braking performance of the car. If the friction area is too small, it will lead to insufficient contact area. If the friction is too small or too large, it is not conducive to the installation. It will lead to the brake may be too sensitive, and it will also lead to the cost of brake production and design is too high.

Material quantity of brake lining

In the case of the same material, the more the friction plates are, the higher the braking performance will be, and vice versa. Under the same pedal force, the smaller the friction coefficient is, the smaller the friction torque is, and the larger the friction factor is, the larger the friction torque.so we can know that different materials will mainly lead to different friction coefficient, which will affect the braking.

Slip ratio

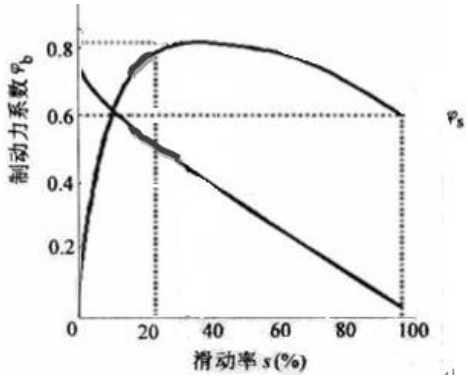

Fig.3 slip ratio

It can be seen from the relationship curve between braking force coefficient or lateral force coefficient and sliding rate in Figure 3 that the lateral force coefficient decreases with the increase of sliding rate. When the sliding rate is 100%, the lateral force coefficient tends to 0. When the wheels are completely locked and the car is subjected to small lateral force, the car will slide laterally, especially when the rear wheel is sliding, the car may swing its tail. The ABS system controls the slip rate at about 15% - 20%. From the above curve, it can be seen that when the slip rate is about 15% - 20%, a higher braking force coefficient and a larger lateral force coefficient can be obtained. Therefore, the braking performance is the best, and the lateral stability is also better, which can avoid the vehicle side slip when braking. After ABS is installed, the stability of automobile braking is improved.

2.3. Analysis of the braking efficiency and its constancy

The constancy of braking efficiency must be satisfied in the design of braking system. When the braking efficiency constant can't meet the requirements, it will affect the continuous braking of the vehicle. Because the brake mainly depends on the torque generated by the friction between the brake caliper and the hub to brake, when the temperature of the friction material of the automobile brake rises to a certain value, the friction coefficient will decrease, which will reduce the braking torque of the automobile, and even lose the braking ability in a short time, resulting in the problem of braking safety in the braking process. The thermal degradation performance of automobile is mainly related to the composition material and brake structure of the friction pair of the brake itself, so the decrease of friction coefficient of friction material will affect the braking of automobile. It is necessary to select the appropriate friction material to make the low-speed continuous downhill automobile run stably, reduce the thermal degradation, improve the braking efficiency, and then improve the safety.

In order to ensure the reliability, efficiency and safety of the automobile braking system, the design of the braking system should have more than or equal to two sets of braking devices. When a certain set of pipeline fails, the remaining intact braking pipeline shall not be less than

ISSN: 2664-9640

30% of the specified value in the case of complete braking. When the vehicle can reach the driving speed range, the vehicle can't lose the handling stability when braking. The design of the braking system should also consider the water and sludge, which can't be allowed to enter the working surface of the brake when braking. This will have a great impact on the braking efficiency, and will affect the driving safety of the driver or passengers under certain circumstances. When the vehicle is braking, the brake friction plate of the vehicle must be heated, so this situation should be considered in the design, and the material selection should have good heat recession resistance. The control must be light. If the brake is not light, the driver will increase the braking time of the car when braking, which will increase the braking distance and affect the braking safety of the car. The design of automobile braking system needs to ensure the convenience and sensitivity of automobile braking. Reduce the noise as much as possible, can't affect the driver's driving safety.

2.4. Analysis of the braking efficiency and its constancy

The front wheels lock up and the rear wheels roll. Assuming that the steering wheel is fixed, the force is shown in figure 4). The front axle will produce sideslip under the influence of lateral force, so the angle between the progress rate UA of point a in the middle of the front axle and the longitudinal axis of the vehicle is α. Because there is no sideslip on the rear axle, the vehicle's trajectory is still in the direction of the longitudinal axis of the vehicle. When the car turns, the middle of instantaneous rotation is o point, so the direction of inertia force F is opposite to the track of car sideslip, which can prevent the car sideslip and keep the car in a stable state.

The rear axle is locked while the front axle is rolling. The force is shown in Fig. 2.4. Under the lateral force, the rear axle side slip occurs, so the direction of the inertial force mark is consistent with the side slip direction, so the inertial force aggravates the rear axle side slip, and the rear axle side slip aggravates the inertial force, and the car will move sharply, which is an unstable condition.

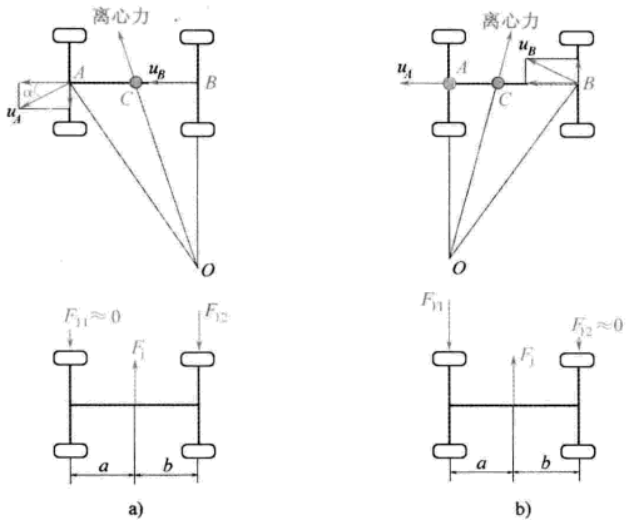

Fig. 4 the movement of the car when it skids

2.5. Relationship between braking force of front and rear brakes

According to figure 5, it is easier for the car to spin its tail when it is no-load than when it is full load. It can be seen from the figure that the change of the center of mass position of the vehicle under no-load and full load causes the difference of synchronous adhesion coefficient, because the center of mass is low, the synchronous coefficient under full load is large, and the front wheel is easy to lose steering; while under no-load, the synchronous adhesion coefficient is small, and the chance of rear wheel locking is large, and the rear axle sideslip is easy to occur at high speed.

ISSN: 2664-9640

The influencing factors of automobile braking efficiency have a great relationship with the distribution of braking force. If the distribution of braking force is unreasonable, there will be two dangerous working conditions: loss of steering ability and rear wheel locking. At this time, the dangerous situation of rollover will occur. The utilization rate of no-load mass and full load mass of automobile has a great relationship with the distribution ratio of braking force.

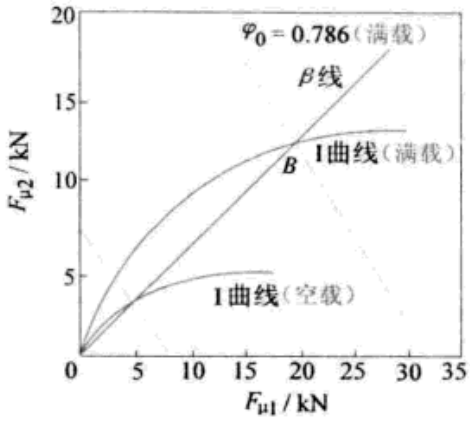

Fig. 5 Relationship between synchronous adhesion coefficient, β line and I line

3. Summary

In this era of great development and great change, automobile technology is changing. The movement of automobile is instinct, and it is the ability to brake. After analyzing the factors affecting the reliability of the automobile braking system, the paper can start with the main factors of the automobile system, the control of road surface and tire, the control of the driving speed, the control of rated load and the good grasp of the technical conditions, and then optimize the braking performance continuously, so as to improve the reliability of the braking system.

Through the analysis of the factors affecting the reliability of the automobile braking system, a car that has been produced can actually have a good improvement space when braking. In this way, it can improve the braking efficiency of the vehicle, improve the braking efficiency of the vehicle, reduce the occurrence of traffic accidents. Only by constantly creating its own core intellectual property rights can China become a steam vehicle A powerful car.

References

[1] Diao Lifu. Automobile braking performance and application technology [M]. Beijing: China water resources and Hydropower Press, 2010.
[2] Ruan she Lou. Reliability analysis, design and calculation of automotive braking system [J]. Journal of automotive engineering, 2013 (1): 29-30.
[3] Liu yuzeng. Reliability analysis of automobile driver [J]. Journal of transportation engineering and information, 2006 (1): 1-4.
[4] Yu Zhisheng. Automotive theory (5th Edition) [M]. Beijing: China Machine Press, 2012.
[5] Journal of automotive industry [Yang Yu, 2005, j.19] Based on neural network analysis.
[6] Chen Jiarui. Automobile structure (5th Edition) [M]. Beijing: China Machine Press, 2006.
[7] Cheng Cheng. Analysis of influencing factors of automobile braking system performance [J]. China new technology and new products, 2017 (10): 38-39.