ISSN: 2664-9640

Research and Design of a New Type of Axial piston variable pump

Xuexin Tang

Luzhou Vocational & Technical College 646000, China.

Abstract

LuAiming at the problem that the swash plate type axial piston pump has a small flow adjustment range and its "swash plate-slip shoe" structure is prone to abnormal wear, this paper studies and designs an axial piston variable displacement pump, which has both The larger flow adjustment range avoids the "swash plate-slip shoe" structure of the swash plate axial piston pump.zhou Vocational & Technical College 646000, China.

Keywords

Innovative design; Output flow adjustment; Axial piston variable pump.

1. Introduction

The swash plate axial piston pump is an important component in the hydraulic system of engineering construction. It has been widely used in various engineering construction machinery products and metallurgical and steel rolling machinery and equipment, and plays a role as the power source of the hydraulic system. However, because the maximum inclination angle of the swash plate is restricted by many factors, the adjustment range of its output flow is greatly restricted. At the same time, its "swash plate-slip shoe" structure not only requires high manufacturing requirements, but also the corresponding friction pairs are prone to abnormal wear during use. In order to overcome the above-mentioned shortcomings of the prior art, this article has developed an axial piston variable pump, which not only avoids the "swash plate-slip shoe" structure, but also has a larger output flow adjustment range.

2. Structure of this axial piston variable pump

The structure of this axial piston variable pump is shown in Figure 1. In the figure, 1. Cylinder liner, 2. Oil inlet check valve, 3. Oil outlet check valve, 4. Sliding sleeve, 5. Plunger pin, 6. Lead screw column, 7. Connecting rod, 8. Crankshaft , 9. Pump body, 10. Oil drain joint, 11. Eccentric wheel frame, 12. Eccentric wheel, 13. Plunger, 14. Motor, 15. Motor coupling, 16. Connecting rod bearing, 17. Rolling bearing, 18. Eccentric shaft, 19. Coupling for stepping motor, 20. Stepping motor, 21. Sliding bearing.

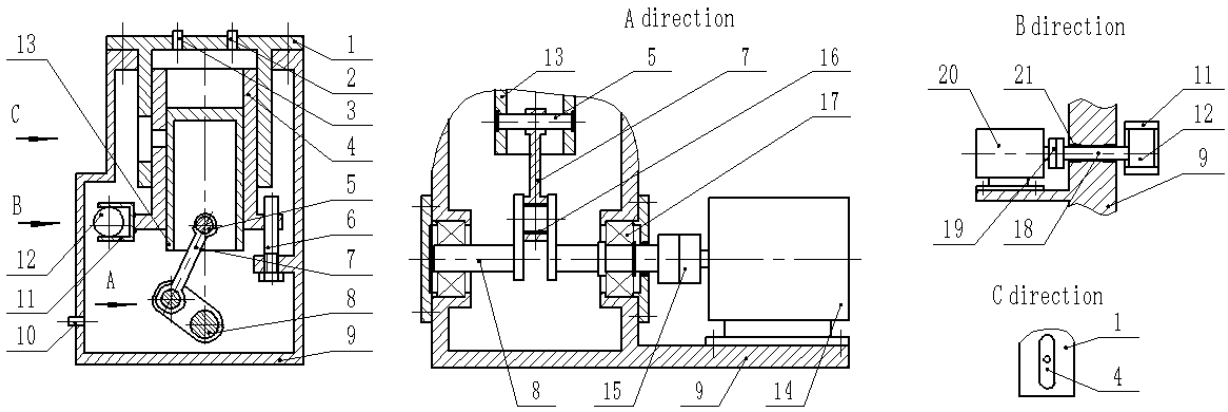

Figure 1 The structure diagram of the axial piston variable pump

ISSN: 2664-9640

As can be seen from the figure1, the designed axial piston variable pump includes cylinder liner, oil inlet check valve, oil outlet check valve, sliding sleeve, plunger pin, lead screw column, connecting rod, crankshaft, Pump body, oil drain joint, eccentric wheel frame, eccentric wheel, plunger, motor, motor coupling, connecting rod bearing, rolling bearing, eccentric shaft, stepping motor coupling, stepping motor and sliding bearing. The cylinder liner is fixedly installed on the pump body, and the oil inlet check valve and the oil outlet check valve are installed on the top of the cylinder liner. The sliding sleeve is in the cylinder liner. The sliding sleeve and the cylinder liner are in clearance fit. The sides of the sliding sleeve and the cylinder liner are provided with holes. The holes on the side of the sliding sleeve are contained in the holes on the side of the cylinder liner. The lower part of the sliding sleeve is provided with a flange. The hole on the flange is in clearance fit with the lead screw column and is welded to the eccentric wheel frame. The eccentric wheel shaft and the eccentric wheel are integrated, the eccentric wheel shaft is supported on the pump body through sliding bearings, and the eccentric wheel is installed in the eccentric wheel frame. The stepping motor is installed on the pump body and connected with the eccentric shaft through a coupling for the stepping motor. The plunger is installed in the sliding sleeve. The plunger and the sliding sleeve are in clearance fit. The lower wall of the plunger is provided with two opposite holes. The two ends of the plunger pin are respectively installed in these two holes, and there is a gap therebetween. Cooperate. The motor is installed on the pump body and connected with the crankshaft through a motor coupling, and the crankshaft is supported on the pump body through rolling bearings. The lower end of the connecting rod is assembled on the connecting rod journal of the crankshaft through the connecting rod bearing bush, and the upper end of the connecting rod is interference-coupled with the plunger pin. The lead screw column is threadedly connected with the pump body, and the lower part of the pump body is equipped with an oil drain joint.

3. Analysis of the working process of this axial piston variable pump

Its working principle is: when working, the motor drives the crankshaft to rotate through the motor coupling, and the crankshaft makes the plunger reciprocate in the sliding sleeve through the connecting rod and the plunger pin. When the plunger moves upward and the top of the plunger closes the hole on the side of the sliding sleeve, the oil inlet check valve is closed, the oil outlet check valve is opened, and oil pumping starts. When the plunger runs to the top dead center, the pump oil ends. When the plunger moves downwards, the oil inlet check valve opens, and the oil outlet check valve closes to suck oil. Since the movement stroke of the plunger is constant, the amount of pump oil for each reciprocating movement depends on the position of the top of the plunger when the hole on the side of the sliding sleeve is closed. The lower the position, the greater the effective stroke of the plunger and the greater the pump oil volume. The pump oil volume can be changed by adjusting the up and down positions of the holes on the side of the sliding sleeve. The stepper motor drives the eccentric wheel to rotate through the stepper motor coupling and the eccentric wheel shaft, so that the eccentric wheel frame moves up or down, so that the sliding sleeve can move up or down, thereby adjusting the position of the hole on the side of the sliding sleeve. The amount of adjustment of this position depends on the package capacity of the hole on the side of the cylinder liner to the hole on the side of the sliding sleeve. By increasing the package capacity, a larger flow adjustment range can be obtained. The adjustment of the pump oil volume by the stepping motor can be dynamically controlled by the computer according to the operating parameters of the hydraulic system.

ISSN: 2664-9640

4. Conclusion

The designed new type axial piston variable displacement pump implements flow adjustment on the effective stroke, which not only expands the flow adjustment range, but also avoids the "swash plate-slip shoe" structure of the ordinary swash plate axial piston pump. The abnormal wear and tear has a good industrial prospect.

References

[1] M.Pelosi and M.Ivantysynova.The Impact of Axial Piston Machines Mechanical Parts Constraint Conditionson The Thermo-Elastohydrodynamic Lubrication Analysisof The Fluid Film Interfaces [J].International Journal of Fluid Power,2013,14(3): 35-51.

[2] YANG Hua-yong,ZHANG Bin,XU Bin. Development of Axi-al Piston/motor Technology[J]. Chinese Journal of Mechanical Engineering,2008,44(10:1-8.

[3] Kim T,Kalbfleisch P,Ivantysynova M.The Effect of Cross Porting on Derived Displacement Volume [J]. International Journal of Fluid Power,2014,15(2) : 77 -85.

[4] J M Bergada,S Kumar,D Li Davies,et al.A Complete Analysis of Axial Piston Pump Leakage and Output Flow Ripples[J].Applied Mathematical Modelling,2012,36:1731 – 1751.

[5] HONG Y S,KWON Y C.Investigation of the power los-ses from hydrostatic piston bearings for swash plate type axial piston pumps under mixed friction conditions [J].International Journal of Precision Engineering and Manufacturing,2014,15(11): 2327 - 2333.