ISSN: 2664-9640

Overview of Low Voltage Ride Through Capability of Photovoltaic System Inverter

Xinwei Guan [a], Guang Wang [b]

Institute of China Three Gorges New Energy(Group)Co.,Ltd. Zuo Yun Branch, China

[a]614941243@qq.com,[b]18441377291@qq.com

Abstract

With the increase in the proportion of photovoltaic, when the voltage of the grid-connected point decreases, the fault cannot be removed simply by relying on passive splitting equipment. Therefore, the low voltage across capability of the photovoltaic system is particularly important for the stability of the power grid. This paper mainly analyzes the principle of low voltage ride through of photovoltaic system inverter and the method of realizing low voltage ride through ability, and analyzes its advantages and disadvantages.

Keywords

Low voltage across, Inverters, Photovoltaic Systems.

1. Introduction

With the development of society, energy demand is increasing day by day, but fossil energy reserves and carbon emissions are also increasingly prominent. To solve this problem, we should first realize clean energy power generation at the power generation end. At the end of 2020, China made clear for the first time the contribution of wind and solar ' carbon peak ' : by 2030, installed capacity of wind and solar will exceed 1.2 billion kW. According to relevant forecasts, photovoltaic will account for 60 per cent of all new renewable energy installations. Therefore, once the grid voltage drops due to some reasons, the current at the grid-connected point will increase impulsely. This impulse peak current is very unfavorable to the inverter. If the fault is solved by passive splitting equipment, the active output of photovoltaic will be greatly reduced, so that the fault of the power system is more serious. In order to improve the stability of the power grid and narrow the fault range, the photovoltaic cannot be simply removed after the voltage at the photovoltaic access point drops. In this context, China has put forward clear requirements for the low-voltage ride-through capability of photovoltaic power plants[1].

2. Organization of the Text

2.1. Principle of photovoltaic low voltage ride through

Since the photovoltaic equipment converts electric energy to DC after collection, it is also necessary to use the inverter for DC / AC direct-AC conversion. Fig. 1 shows the circuit schematic diagram of the inverter and photovoltaic.

ISSN: 2664-9640

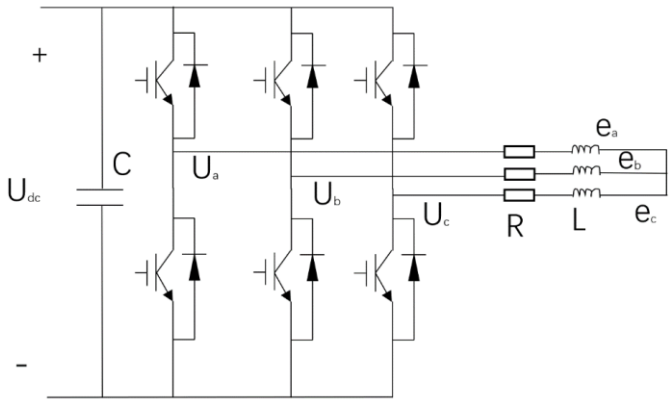

Fig. 1. Inverter circuit schematics

As shown in the above figure, the equivalent circuit is a voltage-type inverter circuit, its main features are as follows :

1.The AC output side voltage is a rectangular wave and is independent of the load impedance angle [2].

2. The DC side capacitor plays a role in buffering reactive power, the inverter bridge each bridge arm feedback diode to AC side DC side feedback reactive energy channels.

In order to achieve the purpose of low voltage ride through, the current method is mainly double closed-loop control method, including outer loop voltage control and inner loop current control. The outer loop voltage control is mainly to control the voltage instability before and after the inverter processing, thereby reducing the power loss caused by voltage fluctuations and improving the efficiency of photovoltaic power generation. The inner loop current control is mainly for power control, and according to the grid command current on the photovoltaic system power, power factor and other real-time adjustment.

At present, China 's photovoltaic low voltage ride through the latest requirements is that when the power system failure, photovoltaic grid voltage drops below the line in Figure 2, the photovoltaic can be removed from operation, otherwise keep grid connected[3].

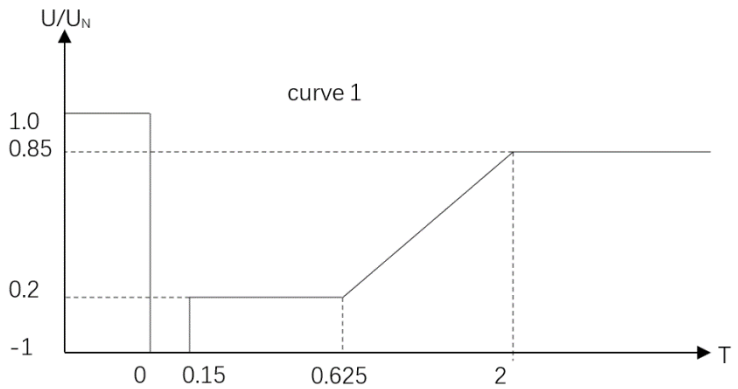

Fig. 2 Low voltage across capability curve

As shown in the above figure, when the grid voltage drops to 0, the photovoltaic power station should not be off-grid continuous operation 0.15 s ; when the grid voltage drops below curve 1, the inverter can be removed from the grid.

2.2. Strategies for achieving low voltage across capability.

At present, there are two main ways to realize low voltage ride through : 1. By adding auxiliary equipment ; 2. Achieved through photovoltaic inverter control strategy. The characteristics and implementation methods of these two methods are different, which are analyzed in detail below.

ISSN: 2664-9640

2.2.1. Additional auxiliary equipment strategy.

At present, there are three ways to add auxiliary equipment : 1. Adding auxiliary equipment on DC side ; 2. Additional auxiliary equipment at the exchange side ; 3. Additional energy storage equipment. Adding auxiliary equipment in the DC side adds load shedding control to the DC side. In order to maintain its grid-connected operation, the input active power is dynamically adjusted by unloading control at the DC side to realize the active power balance of photovoltaic, so as to realize the low voltage ride through of photovoltaic. By adding auxiliary equipment in the AC side, a side resistance is added to the AC side. When the grid voltage drops and the active current increases rapidly, by switching the bypass switch, the size of the bypass resistance is dynamically controlled, and the active power of multiple bypass is consumed on the bypass resistance, so as to realize low voltage ride through. The above two methods are based on the active power consumption of photovoltaic equipment output, so as to reduce the active power output of the grid connection point, so as to realize low voltage ride through. In addition to consuming more active power when the grid voltage drops, the photovoltaic low voltage ride through can also be realized by adding energy storage devices[4], such as super capacitors and energy storage batteries. The difference between the two is that the energy storage battery is parallel to the AC side of the inverter. When the voltage drops, the energy storage battery absorbs the energy of the photovoltaic system, and the energy storage battery can also inject reactive power to the grid. The super capacitor is paralleled in the DC side of the inverter. When the grid voltage drops, the super capacitor absorbs the redundant energy of the DC side and maintains the voltage balance of the DC side to realize photovoltaic.

2.2.2. Control strategy through photovoltaic inverter.

At present, more scholars have studied the low voltage ride through of photovoltaic by improving the control strategy of photovoltaic grid-connected inverter. One is to save costs, and the other is to provide reactive power support for the fault grid without adding hardware through the control strategy.

At present, there are LVRT control based on digital simulator (RIDS), LVRT control based on positive and negative sequence current injection method, and LVRT control based on current deadbeat. Among them, the LVRT control based on digital simulator (RIDS) divides the working state of the inverter into two types : one is the working state when the three-phase voltage is correct, and the other is the working state when the voltage drops symmetrically. When the grid voltage drops asymmetrically, there will be a negative sequence component in the grid, which will generate the double-frequency fluctuation of active and reactive power in the grid, seriously affecting the stable operation of the inverter and the power quality of the grid. In severe cases, it may even lead to photovoltaic off-grid due to overcurrent. Therefore, corresponding control measures must be taken. Therefore, the positive and negative sequence current injection method came into being. However, although the positive and negative sequence current injection method can realize the control of negative sequence current, the premise is to separate the positive and negative sequence of voltage and current. That is to say, the effect of positive and negative sequence current control is largely affected by the accuracy and rapidity of positive and negative sequence separation method. The deadbeat current control reduces the DC side voltage by limiting the output current range of the inverter and increasing the unloading resistance in the system.

2.3. PV LVRT strategy advantages, disadvantages and influence technology.

Obviously, the advantage of voltage ride-through using external auxiliary equipment is that the control requirement of inverter is not high and the realization is simple. Its biggest disadvantage is to add hardware equipment and increase investment costs[5]. However, using the improved inverter control strategy to achieve low voltage ride through does not necessarily need to increase the hardware cost. At the same time, it can also provide a certain amount of

reactive power when the grid voltage drops, supporting the grid voltage, but the reactive power compensation ability provided by photovoltaic is limited.

3. Conclusion

It can be seen from the above analysis that in order to achieve good low voltage across, two parameters should be solved first : one is the voltage synchronous phase-locked signal, and the other is the positive and negative sequence components. These two parameters directly determine the low-voltage ride-through capability of the inverter. Therefore, in order to improve the low voltage across capability of inverter, it is very important for the research and development of maximum power point tracking technology, anti-islanding detection technology, phase locked loop technology and positive and negative sequence separation technology.

References

[1] Xiaolin Zhang, , Jingsheng Huang, Fei Zheng,and Junjun Zhang. "Grid voltage sags control strategy for photovoltaic inverter based on adaptive dynamic reactive power compensation", International Conference on Renewable Power Generation (RPG 2015),2015.
[2] Submitted to University of the Highlands and Islands Millennium Institute.
[3] Yongkai Li, Yong Lei, Xiaodong Lin, Yingwei Zhu. "Research on the Application of an SMES Based on Sliding Mode Control to Enhance the LVRT Capability of a Grid-Connected PV System", Electric Power Components and Systems, 2019.
[4] Liqun Shang, Pengwei Li, Zhuojun Li. "Low Voltage Ride Through Control Method of Photovoltaic Grid-connected Inverter Based on Model Current Predictive Control", 2018 Chinese Control And Decision Conference (CCDC), 2018.
[5] Xia Chen, Yanwei Cui, Xinru Wang,Shuangshuang Li. "Research of low voltage ride through control strategy in photovoltaic(PV) grid", 2017 Chinese Automation Congress (CAC), 2017.