ISSN: 2664-9640

Design of improved boring device based on ordinary lathe

Jun Ma

Suzhou Vocational Institute of Industrial Technology, Suzhou, 215104, China

Abstract

This paper studies and designs the device for improving and optimizing the boring processing on the ordinary horizontal lathe, puts forward the scheme and specific implementation mode of the improved boring device, analyzes the working principle and process in detail, and verifies it with the processing example of production parts. The boring function expansion and accuracy improvement without changing the main structure of the lathe are realized, and the utilization rate of machining equipment is improved.

Keywords

Ordinary lathe; improvement; boring device; design.

1. Introduction

In the machining industry, lathe is an ordinary and commonly used processing equipment. In most cases, the lathe has only a single turning structure or operation mode. Although the boring process can be realized on the lathe, the scope and accuracy of the hole are greatly limited. Especially, it is relatively difficult to process large-diameter deep holes on the ordinary horizontal lathe, the cutting vibration caused by the lack of tool bar stiffness often leads to low surface quality of parts and tool damage, the size and roughness of the hole can not be guaranteed, and the production efficiency is not ideal.

Boring with a boring machine can be significantly improved, but the boring equipment is another relatively independent device. This makes the machining equipment have single function and strong dispersion, resulting in a wide variety of equipment in machining enterprises, covering a wide area, and also brings a heavy workload to equipment maintenance personnel. Therefore, how to optimize the functional configuration of machining equipment, so that the processing equipment can expand new functions and phase out single function equipment without changing the main structure, has become a problem to be solved by those skilled in the art.

2. Design scheme of improved boring device

In view of the defects existing in the boring processing of the existing ordinary horizontal lathe, from the perspective of transforming the ordinary machining equipment, the purpose of this design is to innovate and develop an improved boring device based on the ordinary lathe, so as to realize the compound addition of more optimized boring function in the traditional lathe.

The design is to be realized through the technical scheme with the following main features: a boring cutter bar is set on the ordinary horizontal lathe, one end of the boring cutter bar is installed on the lathe chuck, the other end is threaded on the movable support seat, the boring cutter bar can rotate relatively in the movable support seat, and the movable support seat is pressed and fixed on the lathe tailstock; A boring cutter is installed in the middle section of the boring cutter bar. The cutter fixing device of the ordinary horizontal lathe is transformed into a workpiece fixing device. The workpiece fixing device is mounted on the slide box of the lathe and realizes controllable follow-up parallel to the length direction of the boring cutter bar. The

ISSN: 2664-9640

bored workpiece needs to be sleeved on the boring cutter bar and installed on the workpiece fixing device. In the improved boring device, the boring cutter is equipped with a boring blade, and the boring blade is adjustable along the radial expansion of the boring cutter bar; At the same time, the sliding of the lathe tailstock is adjustable, which is butted and fixed with the movable support seat in the device.

Using the improved boring device, through the trial cutting of boring holes with different aperture and hole depth, we find that this scheme not only does not change the main structure of the lathe, but also realizes the boring processing of the workpiece, expands and optimizes the function of the machine tool, and improves the utilization rate of the machining equipment; For the boring workpiece, the processing cost is saved and the economic benefit of the product is improved.

3. Specific implementation mode of improved boring device

Using the design scheme of the above improved boring device, the specific device structure diagram of the innovative development is shown in Figure 1.

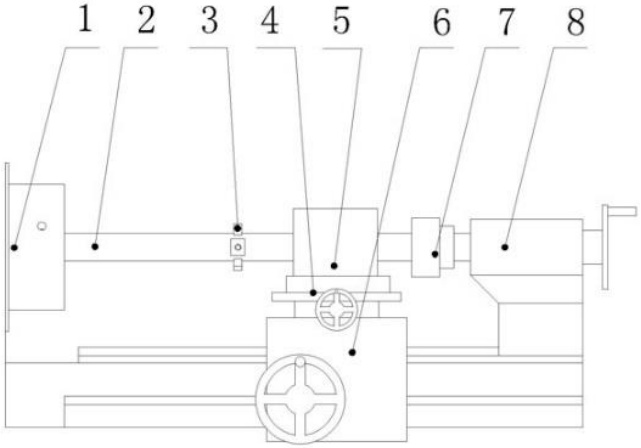

1 chuck 2 boring tool bar 3 boring cutter 4 workpiece clamping device
5 workpiece 6 slide box 7 movable support seat 8 tailstock

Fig.1 Structural diagram of improved boring device

As can be seen from the figure, the improved boring device takes the ordinary horizontal lathe as the main body, and the lathe 6 is provided with a boring cutter bar 2. One end of the boring cutter bar is installed on the chuck 1 of the lathe, and the other end is threaded on the movable support seat 7. The boring cutter bar can rotate relatively in the movable support seat, and the radial runout is limited by the movable support seat, Thus, the boring tool bar can rotate stably along the longitudinal straight direction, and the movable support seat 7 is tightly fixed on the lathe tailstock 8; A boring cutter 3 is installed in the middle section of the boring cutter bar 2 to change the tool fixing device of the lathe into a workpiece fixing device 4. The workpiece fixing device 4 is mounted on the lathe slide box 6 and can be controlled and followed parallel to the length direction of the boring cutter bar 2. The boring workpiece 5 is sleeved on the boring cutter bar 2 and installed and connected to the workpiece fixing device 4. The boring blade installed on the boring tool 3 can be adjusted along the radial expansion of the tool bar to meet the different needs of the aperture. In addition, as the balance stopper of the boring tool bar, the movable support seat 7 can be pressed by sliding the lathe tailstock on its right side, or can be directly fixed on the lathe tailstock in an integrated form.

Further analysis from the working principle, in the improved boring device of the lathe shown in Figure 1, the boring bar 2 is clamped on the lathe through the lathe chuck 1. At this time, the other end of the boring bar is a free end and is in a cantilever state. If the lathe is started in this

ISSN: 2664-9640

state, the circular runout of the boring bar will be very large. In order to solve this problem, we specially designed a movable support seat 7 at the other end of the boring bar. The boring bar can rotate relatively in the movable support seat, and the movable support seat limits the radial position of this end of the boring bar to prevent runout during operation, the right end of the movable support seat is tightly fixed through the lathe tailstock 8, so that the boring tool bar is reliably fixed on the lathe. The boring cutter 3 is designed to be directly installed on the boring cutter bar. The boring blade installed on the boring cutter can be adjusted radially along the boring cutter bar. The boring diameter can be changed as needed. During processing, it should be adjusted to an appropriate extension length and fixed by tightening screws. The boring workpiece 5 is fixed on the workpiece fixing device 4 by threaded connection or clamping parts, and the workpiece fixing device 4 itself is fixed on the lathe slide box 6, so that the boring workpiece 5 can follow the lathe slide box to realize feed movement. During machining, start the lathe, the lathe spindle rotates to drive the boring cutter to rotate with the boring cutter bar at high speed, the workpiece is reliably clamped at the required height, adjust the slide position to make the workpiece to be bored to the accurate machining position, and control the lathe slide box to feed left or right at an appropriate speed on the guide rail until the boring machining is completed. The axial positioning of the boring cutter on the boring cutter bar shall be appropriate and fixed at the required position. Generally, it is selected in the middle of the boring cutter bar to ensure that the boring cutter can pass through the workpiece completely and normally. At the same time, there is no interference between the lathe slide box and the boring cutter, so as to ensure that the whole boring operation can be completed.

4. Machining example of improved boring device

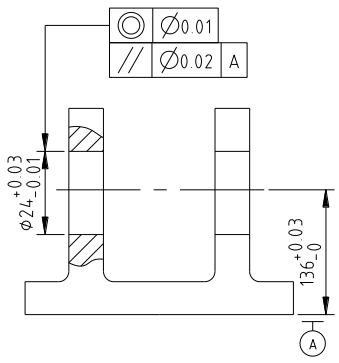

Fig.2 Schematic diagram of processed workpiece

The improved boring device is used to process two holes with a diameter of 24 in the part shown in Figure 2. It can be seen from the figure that the two hole diameters are small and there is a certain span in the position, which will put forward high requirements for the boring tool bar, because the tool bar has small diameter and large length, and the stiffness is difficult to ensure. If the conventional processing method is difficult, the problem can be solved by using the improved boring device. Firstly, the boring tool bar is fixed at both ends and uses a movable support seat to effectively improve the stiffness and stability and ensure the machining accuracy; In addition, due to the high requirements for the dimensional and geometric tolerance accuracy of the parts shown in the figure, the process arrangement should include rough boring, semi fine boring and fine boring. The improved boring device can be completed only by clamping once, replacing or adjusting different boring cutters (pieces), which is simple and easy, the efficiency is improved, the accuracy is improved, and the processing quality and cost control can be well guaranteed.

ISSN: 2664-9640

5. Conclusion

The improved boring device based on the ordinary lathe studied in this design can well realize the boring processing of the workpiece without changing the main structure of the lathe. The whole device has the advantages of simple structure, convenient production, easy application and promotion in actual production, and has wide practicability. At the same time, the design itself also expands the function and processing range of ordinary lathe, and improves the utilization rate of machining equipment; For the workpiece to be bored, the improvement of the rigidity of the boring tool bar, the integrated arrangement of multiple processes and the reduction of clamping times more effectively expand the range of machining aperture and hole depth, save the machining cost, improve the machining accuracy of parts and products, and synchronously improve the economic benefits.

References

[1]Chen Huizhen. Design of improved boring device based on common lathe [J]. Shandong industrial technology.2017.1:1-1

[2]Yuan Zhaojun. Skillfully boring with sleeper [J]. Metal processing (cold processing). 2011.3:40-40

[3]An Yong, LV Rongmei. Boring device for improving machining efficiency of horizontal lathe [J]. Metal processing (cold processing). 2011.16:49-49

[4] Liu Jinsong. Transforming ordinary lathe into special boring lathe [J]. Mechanical engineer. 2010.10:105-106

[5]Wang Liang, Zhu Yuying. Modification of deep boring device for lathe [J]. Manufacturing technology and machine tools. 2008.03:126-127

Introduction to the author: Ma Jun (1973-), from Suzhou, Jiangsu Province, Professor.

Main research direction: mechanical manufacturing and automation (Advanced Manufacturing Technology).

E-mail:maj@siit.edu.cn Tel: 13912625777

Address: Department of automotive engineering, Suzhou Vocational Institute of Industrial Technology, Suzhou, Jiangsu Province.