ISSN: 2664-9640

Study on Parameter Matching and Performance of Powertrain of New Energy Pure Electric Vehicle

Jia Liu

FAW Pentium Car Co., Ltd, Jilin, China

Abstract

Under the background of the new era, energy consumption and environmental pollution become the main factors limiting the development of the automobile industry, and new energy vehicles are a new idea for the development of the industry. Therefore, on the basis of understanding the development situation of new energy pure electric vehicles at home and abroad, this paper clarifies the basic structure of electric vehicles and uses the simulation software ADVISOR to build the power system model to analyze the parameter matching and performance of new energy pure electric vehicles.

Keywords

New energy; Electric vehicles; Power system; Parameters; performance.

1. Current status of new energy pure electric vehicles

Compared with traditional cars, electric vehicles have more advantages. Therefore, domestic and foreign countries begin to integrate their own resources in the development of practice and actively develop personalized automobile products. China began to study pure electric vehicles in the 1960s. [1-2]Relevant enterprises, universities and research institutions have gradually built an integrated development model of scientific research while building cooperative relationships, and accumulated rich work experience. [3-4]Now some of the research results have been produced in small quantities and have been recognized and supported by the society. While from the perspective of the overall development of our country automobile industry development later, but compared with developed countries, the lack of core technology, the traditional auto industry development in the research of new energy pure electric vehicles, all countries in the same starting line, therefore very promising in China developed with completely independent intellectual property rights of core technology or product. Therefore, in the context of both opportunities and challenges, China should continue to explore the development conditions of electric vehicle industry on the basis of integrating previous research experience, so as to develop into a powerful country of automobiles while giving play to the advantages of new energy.[5]

2. Basic structure of new energy pure electric vehicles

In essence, electric vehicles are vehicles driven by electricity, and their powertrain composition is somewhat different from that of gas-fired vehicles. According to the operation analysis of the existing new energy pure electric vehicle, its basic structure is shown in Figure 1 below, which mainly includes three systems: power supply, electric drive and auxiliary.[6-7]

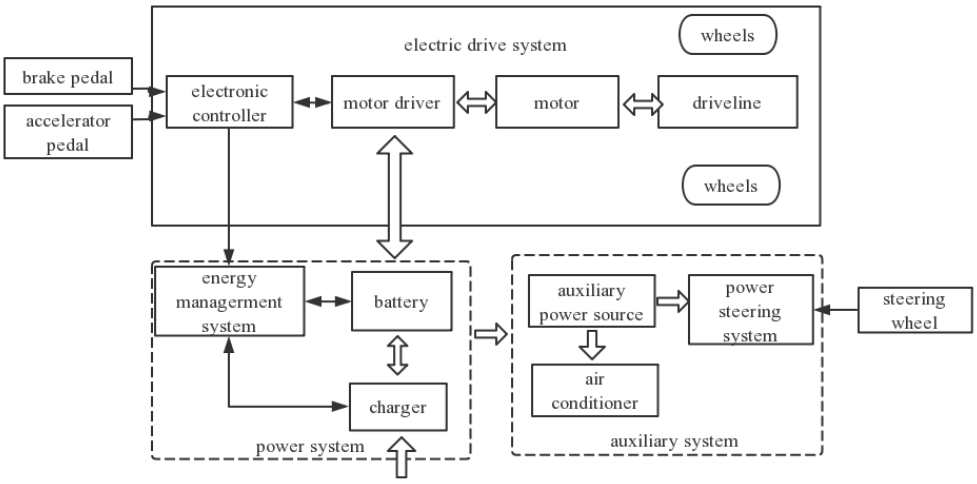

Figure 1 The basic structure of an electric vehicle

3. Analyze the parameter matching and performance of power system

3.1. Analyze vehicle parameters

Taking LS6600C1 electric vehicle as an example, although the power system design is very flexible, in order to fully show the advantages of motor drive, the following methods can be selected, as shown in Figure 2 below.

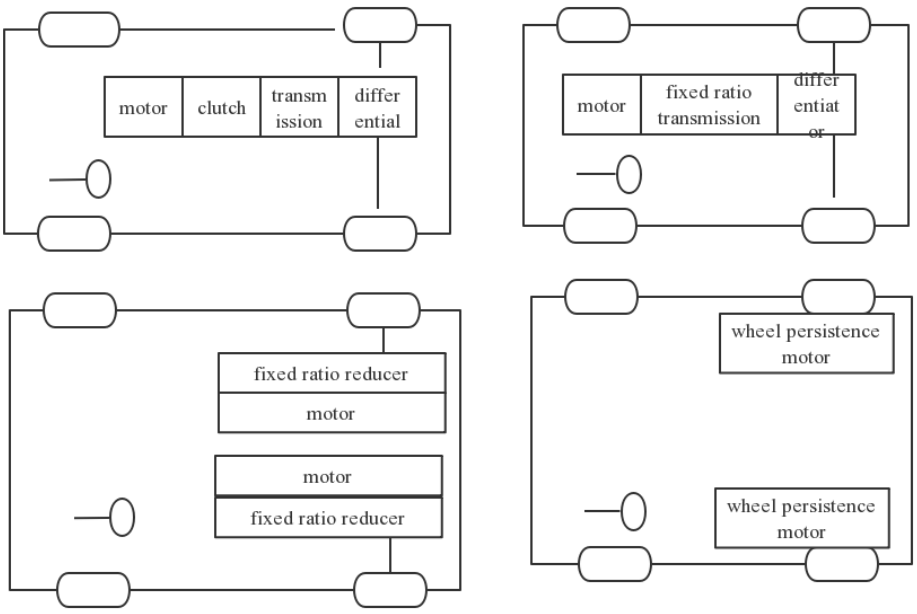

Fig. 2 Four arrangement forms of the power system

Taking "A" as an example, it can not only reduce the requirements on motor performance, but also scientifically regulate the running speed of electric vehicles under different conditions. According to the vehicle parameter analysis of the research prototype LS6600C1, as shown in Table 1 below, the researchers retained the clutch, main reducer and gearbox, etc., and used the battery and motor to replace the traditional fuel engine and engine, so as to reduce the requirements on the pitch and motor speed.

Table 1 Complete vehicle parameters of LS6600C1 electric vehicle

Total mass (kg)	4650	Maximum speed (km/h)	95
Ready mass (kg)	3150	Length,width and height (mm)	5995×2180×2760
Wheelbase separation (mm)	3310	Number of passengers carried (person)	13-19
Front and rear suspension (mm)	1205/1480	Type of transmission	CAS5-25
Approach Angle (°)	20	Angle of departure (°)	14

3.2. Parameter matching design

First, electric motors. Since the drive motor directly determines the power system of the new energy pure electric vehicle, it is necessary to make a reasonable choice from its rated power and peak power. Take the former as an example, the first thing to do is to calculate the maximum speed of the car, which is also the main data to determine the dynamic performance of the car. The specific formula is $P_{e1}=(\frac{Gf}{3600}u_{a\max}+\frac{C_D A u_{a\max}{}^3}{76140})\frac{1}{\eta_t}$;Second to calculate the maximum climbing slope of the car, the formula is $P_{mi}=(\frac{Gf\cos a}{3600}u_a+\frac{C_D A u_a{}^3}{76140}+\frac{G\sin a}{3600}u_a)\frac{1}{\eta_t}$;Finally, the power required by the EV to accelerate from the initial speed of 0 to the final speed on the horizontal road is calculated. The specific formula is as follows $P_{ma}=(\frac{Gf}{3600}u+\frac{C_D A u^3}{76410}+\frac{\delta m u}{3600}\frac{du}{dt})\frac{1}{\eta_t}$.

Second, the transmission system. When operating under different conditions, new energy pure electric vehicles only start from the torque change of the motor, which cannot meet the performance requirements of the vehicle. Therefore, parameters of the traditional system can be designed respectively from the upper and lower limits of the driveline speed ratio. The specific formulas are shown as follows:

$$\sum i \le \frac{0.377\, n_{\max} R}{U_{\max}}$$

$$\sum i = i_0 i_g$$

$$\sum i \ge \frac{F_{i\max} R}{\eta_t T_{\max}}$$

Among them, $\sum i$ The formula represents the total transmission ratio, $n_{\max}$ Represents the maximum rotation speed of the motor, R represents the radius of the wheel, and i_0 i_g Represents the transmission ratio of the main reducer and transmission respectively. $F_{i\max}$ Represents the driving resistance corresponding to the maximum climbing slope, and $T_{\max}$ Represents the maximum output torque of the motor.

Third, the battery pack. As the basic part of the new energy pure electric vehicle, this parameter directly determines the efficiency and quality of the vehicle. Therefore, to guarantee the safety of the vehicle, it must meet the requirements of the motor. Generally speaking, parameter design should start from two aspects. On the one hand, the number of batteries should be determined by calculating the maximum power of the motor. The formula of maximum power of a battery under the working condition of the vehicle is $P_{b\max} = \frac{2E^2}{9R_{\text{int}}}$,So to calculate the number of batteries needed, the formula is $n_p = \frac{P_{e\max}}{p_{b\max}\eta_e\eta_{ec}}$;On the other hand, the number of batteries can be determined by calculating the driving range of electric vehicles. In order to ensure that the energy possessed by the battery can meet the running needs of the vehicle, the formula corresponding to the total energy is $W_{ess} = \frac{U_{ess}C}{1000} = \frac{nU_eC}{1000} = nW_e$ .Assuming that the car runs at the speed of u_a , the energy consumption required to drive S is expressed as $W = \frac{PS}{u_a}$,Among them $P = (\frac{Gf}{3600}u_a + \frac{C_D A u_a^3}{76140})\frac{1}{\eta_t}$. Since all the energy of the battery is put forward for the operation of the car, the formula of the number of batteries required is, where represents the discharge depth of the battery. Combined with the above analysis, the final formula of battery number can be obtained as $n = \max(n_p, n_L)$.

3.3. Performance test analysis

In order to study whether the parameters of the powertrain meet the requirements, this paper conducts experimental analysis on the overall vehicle performance based on the ADVISOR simulation driving simulation system. According to the performance test requirements proposed by the state, the high-speed annular runway and straight track are selected for the test operation.

Taking the maximum speed as an example, on the basis of fully charging the electric car, 750kg load is added to the test car to ensure that it can be evenly distributed on the seats. Starting the electric car on a circular track and accelerating until it reaches a straight-through lane ensures it can reach the test section at the highest steady speed. At the end of the operation, the same method should be used to test again, but the driving direction is opposite, and the final data is shown in Table 2 below.

Table 2 Experimental results of maximum speed

No.	Driving Direction	Driving Mileage (km)	Driving Time (s)		Maximum Speed (km/h)
			Measured value	Average value	
1	From east to west	1	48.17	48.06	74.91
2	From west to east	1	47.95		

When testing the acceleration performance, the car is first tested in the straight road section according to the above preparation method. The car accelerates from a standstill, starts in gear 1 and accelerates rapidly, then selects the appropriate gear to increase the speed to 30±1km/h, and finally calculates the time required for the speed to reach 30±1km/h. In addition, the operation should be started from the other end of the straight line segment, and the same method is used for calculation. The specific data is shown in Table 3.

Table 3 Experimental results of acceleration

Serial number	direction	time(s)	average time (s)	distance (m)	The average distance (m)	the average speed (km/h)
1	From east to west	13.84	13.51	67.88	66.50	17.72
2	From west to east	13.18		65.12		

By comparing and analyzing the test results of electric vehicles and the software simulation, it can be seen that the matching situation of vehicle parameter design is reasonable at present, but there are not many problems, which has a positive effect on the development and innovation of new energy pure electric vehicles in the future.

4. Conclusion

To sum up, as the basic content of urban construction and development, new energy pure electric vehicles can not only reduce resource consumption and avoid urban pollution, but also change residents' living mode and improve the development level of the automobile industry. Through the study of its power system parameter design, combined with the comparison of experimental simulation, it is found that the development of a new electric vehicle based on the existing simulation system can enhance the scientificity, practicability and effectiveness of the vehicle, which has a positive effect on the future research of electric vehicle.

References

[1] Alamusi, Xiao T , Wu L , et al. Influences of preparation process on electrical conductivity and thermal expansion coefficient of epoxy/graphene nanocomposites[J]. Materials Research Express, 2019, 6(11):116318.
[2] Jinai P , Autthawong T , Promanan T , et al. Preparation of Mg-Si and Nitrogen-Doped Graphene Nanocomposites for Use as Lithium-Ion Anode[J]. Solid State Phenomena, 2020, 302.
[3] Mohsin M E A , Arsad A , Hassan A , et al. Preparation and characterization of conductive Polyaniline/Sago/Graphene nanocomposites via ultrasonic irradiation[J]. IOP Conference Series Materials Science and Engineering, 2019, 522:012002.
[4] Zhang Y , Kou K , Ji T , et al. Preparation of Ionic Liquid-Coated Graphene Nanosheets/PTFE Nanocomposite for Stretchable, Flexible Conductor via a Pre-Stretch Processing[J]. Nanomaterials, 2020, 10(1).
[5] Bagotia N , Choudhary V , Sharma D K . Synergistic effect of graphene/multiwalled carbon nanotube hybrid fillers on mechanical, electrical and EMI shielding properties of polycarbonate/ethylene methyl acrylate nanocomposites[J]. Composites, 2019, 159(FEB.15):378-388.
[6] Zheng L , Geng Z , Zhen W . Preparation, characterization, and reaction kinetics of poly (lactic acid)/ amidated graphene oxide nanocomposites based on reactive extrusion process[J]. Journal of Polymer Research, 2019, 26(3).
[7] Khan H U , Jan M T , Iqbal M , et al. Synthesis, Characterization and Electrical Conductivity of Silver Doped Polyvinyl Acetate/Graphene Nanocomposites: A Novel Humidity Sensor[J]. Zeitschrift für Physikalische Chemie, 2019, 234(1).