ISSN: 2664-9640

Research on Replacing Bracket of Portable Porcelain Bottle

Gang Zhou, Ming Wu *

Qingyuan Power Supply Company of State Grid Zhejiang Electric Power Co., Ltd, Lishui, 510000, China;

Abstract

With the increase of power supply load and the gradual advancement of marginal transformation of distribution lines, the wire diameter of distribution lines is getting larger and larger, and porcelain bottles are used more and more frequently. In this paper, the optimization design of portable porcelain bottle replacement bracket is studied, including bracket and adjusting plate. The bracket is of L-shaped structure composed of top plate and side plate connected vertically. One end of the adjusting plate is pivoted with the free end of the top plate through a vertical rotating shaft. The adjusting plate is located at the lower end face of the top plate, and the other end of the adjusting plate can rotate in the horizontal plane. The upper end face of the top plate is provided with a plurality of porcelain bottle mounting holes for mounting porcelain bottles, and the upper end face of the adjusting plate is provided with a plurality of threaded through holes. The unique structural design makes it beautiful in appearance, simple in structure and convenient to install, and the angle design makes the space more convenient to install porcelain bottles, which greatly improves the overall stability and prolongs the service life of porcelain bottles.

Keywords

Porcelain bottle; Bracket; Design.

1. Introduction

In the long-term operation of power system? Porcelain bottles will break down and break due to various reasons, which need to be replaced in time, and live replacement of porcelain bottles is one of the most important maintenance methods. In recent years, with the increase of power supply load and the gradual advancement of insulation transformation of distribution lines, the wire diameter of distribution lines is getting larger and larger, and the porcelain bottles used are getting larger and larger [1]. In overhead lines, porcelain bottles are used to tie and support overhead wires, so as to insulate the wires from the earth and prevent the wires from leaking electricity. Because the line transition cannot be carried out in the best position, the operation difficulty and intensity are greatly improved, and the safety risk is particularly prominent, which often leads to the situation that live operation cannot be carried out.

All these lead to some potential safety hazards in the operation of the existing replacement methods, which require a lot of manpower and material resources. However, the power systems in various places need to replace the top porcelain bottles for many times due to maintenance, emergency repair and other reasons. Therefore, it is extremely urgent to change the traditional way of replacing top porcelain bottles [2]. Therefore, it is urgent to develop a portable porcelain bottle replacement bracket for replacing porcelain bottles, so as to ensure the safe and efficient replacement of corner rod porcelain bottles and vertical porcelain bottles, reduce the working intensity of workers, and improve the reliability of power supply and the availability of equipment.

ISSN: 2664-9640

2. At present, the common methods of replacing porcelain bottles

Workers on the pole lift the lead with their shoulders, put it on the cross arm, and then replace the porcelain bottle. This method is limited by the space on the pole, the number of people on the pole is limited, and there are high requirements for the strength of the staff on the pole, which has potential safety hazards. A steel pipe is vertically bound at the top of the pole, and a tightener is fixed at the top of the steel pipe to lift the wire, and then the porcelain bottle is replaced [3]. The steel pipe in this method is easy to bend due to excessive stress, and it is difficult to bind and fix the steel pipe and easy to slide down and swing from side to side; The tightener is inconvenient to operate, and the installation of tightener will have higher requirements on the length of steel pipe; Increasing the workload and working time of staff on the pole has potential safety hazards. Fix a tightener on both sides of the line to tighten the wires in both directions synchronously, so that the wires in the middle part are not stressed, and then replace the porcelain bottle [4]. The tools and instruments of this method are heavy, which greatly increases the workload and time on the rod; The tightener on the top of the rod is not easy to fix; When two tighteners are tightened, they can't be tightened at the same time, which leads to uneven stress on the fixing points of the wires and tighteners, which leads to potential safety hazards.

3. Working principle and process of the device

3.1. Working principle

At present, the main problem for replacing equipment on the pole (such as porcelain bottle on the pole, cross arm, etc.) with large span straight pole is how to fix the wire with large span to prevent it from falling and provide space for maintenance work [5]. Fig. 1 is a schematic structural diagram of the utility model. In the picture: 1. Bracket; 2. Roof; 3. Side plates; 4. Porcelain bottle mounting hole; 5. Vertical rotating shaft; 6. Adjusting plate; 7. Support column; 8. Support plate.

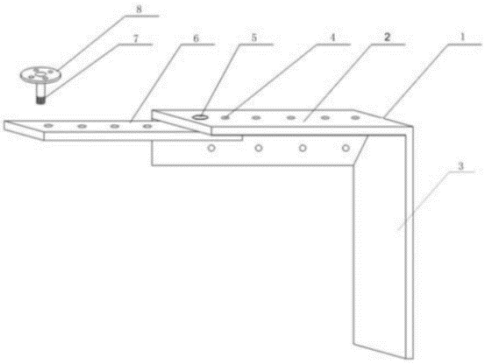

Figure 1 Structural representation

A portable porcelain bottle replacement bracket comprises a front splint and a rear splint which are equal in size, same in shape and symmetrically arranged. The insulating plates for the three sets of pulleys and broadsword clamps shall be made of light materials, with insulation strength and mechanical strength meeting the requirements of regulations, and good bending resistance, which can bear the tension of wires and the dead weight of porcelain bottles. The position of the whole device is fixed by the clamping device, the cable is separated from the corner porcelain bottle by the cable supporting device, and then the cable is contacted with the corner porcelain bottle after the corner porcelain bottle is replaced. This device can be used as a temporary corner porcelain bottle when replacing the corner porcelain bottle, leaving enough operating space for the replacement work.

ISSN: 2664-9640

When using this method to replace the tension insulator string on line, check and check the overhead ground wire first. The bracket is an L-shaped structure formed by vertically connecting a top plate and a side plate, one end of the adjusting plate is pivoted with the free end of the top plate through a vertical rotating shaft, the adjusting plate is positioned at the lower end surface of the top plate, and the other end of the adjusting plate can rotate in a horizontal plane; The horizontal sections 2 of the front splint and the rear splint are both provided with bolt holes 2, which are provided with fastening bolts, and the extension length of the inner sleeve is adjusted through the limit rotating bolts and the limit holes, so that the applicability of the device is stronger. The fixed hoisting bracket is welded and fixed on the upper part of the support column, and the pipe bus is hoisted when replacing the porcelain bottle of the pipe bus pillar, which plays the role of separating the pipe bus from the porcelain bottle of the pillar; At the same time, the pillar porcelain bottle can be lifted by using the rotating bracket, and the two brackets do not interfere with each other when working at the same time. According to the feature that the lever can change the receiving direction, as long as a lever bracket is installed on the angle iron cross arm, the wire can be easily carried and replaced with a porcelain holder.

3.2. Safety requirements

Before entering the construction site, it is necessary to clarify the division of labor and responsibilities, and carry out safety instructions and safety training. The operation ticket system has been fully implemented. Insulation boards or insulating mats should be placed in workplaces. Workers should wear insulating shoes, insulating gloves, electromagnetic wrenches, insulating ladders, etc., and use insulating jacks and tools for insulation. It is emphasized that construction should not be forced under severe weather such as heavy fog and rainy days.

3.3. Work flow

As shown in fig. 1 above, an insulating porcelain bottle mounting bracket comprises a bracket 1 and an adjusting plate 6, wherein the bracket 1 is an l-shaped structure formed by vertically connecting a top plate 2 and a side plate 3, one end of the adjusting plate 6 is pivoted with the free end of the top plate 2 through a vertical rotating shaft 5, the adjusting plate 6 is located at the lower end surface of the top plate 2, and the other end of the adjusting plate 6 can rotate in a horizontal plane; Current transformer debugging is generally carried out by using current transformer calibrator at the installation site. For the first time, current should be added from the terminal outlets of grounding knives on both sides, and the connecting piece of grounding knives should be disconnected. For the second time, samples should be taken from the terminal box of current transformer body. Adjust the lead screw and loosen the porcelain string. At this time, the porcelain string tightens the tackle rope by its own weight, which is not affected by the wire tension, and then take out the spring pins at both ends of the porcelain string; The support assembly comprises a support column 7 and a support plate 8, wherein the support column 7 is screwed into the threaded through hole through threads arranged at the lower end of the support column; the support plate 8 is fixedly arranged on the upper end face of the support column; and a porcelain bottle mounting hole for mounting porcelain bottles is arranged on the support plate.

4. Application effect of portable porcelain bottle replacement bracket

Before the implementation of the project, the traditional porcelain bottle replacement method needs a long working time, requires a large number of workers to operate, and requires a large number of staff and potential safety hazards. When using iron bars and steel wire tensioners to fix steel wires, there are high requirements for the replacer, and the heavy weight of the

replacer makes it inconvenient for workers to carry and has potential safety hazards in the process of climbing rods. It is necessary to use different tools to replace the horn porcelain bottle and the vertical porcelain bottle, which increases the workload of the staff.

After the implementation of the project, the portable porcelain bottle replacement bracket is simple in structure and technology, and the symmetrical front splint and back splint with the same size and shape are used instead of hardware for fixing. Through the insulation performance test of the equipment, it can indirectly know whether there is a fault inside the equipment. During the test, the current transformer is shorted for the second time and can be grounded. The utility model is characterized in that steel commonly used in daily work is used as raw material, which is assembled and formed by welding. In this way, it is easier to realize the economy of making the utility model, which greatly saves the cost and is more convenient and practical. During installation, the bracket is installed on the wall through bolts. The installation frame of the utility model can adjust the installation of porcelain bottles in different directions by rotating the adjusting plate, which is convenient for the arrangement and erection of lines. In addition, the use amount of angle iron bracket is effectively saved by adding supporting columns and supporting plates.

5. Conclusion

This paper analyzes the problems and shortcomings in the application of porcelain bottles, and studies and designs a portable porcelain bottle replacement bracket, which is not only simple in structure, firm in fixation, but also convenient in installation, beautiful in appearance and low in cost. Before installation, the relevant technical standards should be mastered, and a feasible scheme should be worked out according to the actual situation of the installation site. During installation, the cleanliness of the site should be strictly guaranteed. Through practical observation of the use of portable porcelain bottle replacement bracket, the effect is good and the safety is high, which can facilitate the staff to replace porcelain bottles, improve the efficiency of porcelain bottle replacement, shorten the power outage time, and improve the reliability of power supply and the availability of equipment.

Suggestions for improvement: Strengthen the quality management of porcelain bottle spare parts procurement, increase the technical requirements of dimensional error in future procurement contracts of pillar porcelain bottles, and strictly control the acceptance of spare parts in storage. Continuously improve operation methods, improve technical measures and safety measures, and take backup protection measures as the focus of future work.

References

[1]. Xie dihui, pan jianxiang. research on bracket replacement technology of portable porcelain bottle. theoretical study of urban construction: electronic edition, Vol. 000 (2015) No. 023, p. 6467-6468.
[2]. Zhang Kun, Zhang Haiyan, Zhang Junfang. Introduction of replacing tension porcelain bottles of transmission lines with insulated ropes [J]. Inner Mongolia Electric Power Technology, (2006) No.02, p. 55-56.
[3]. Zheng Yuhui, Sun Jinglin, Fan Cuiping. Technology and popularization of rapid replacement of arrester. Chinese Science and Technology Journal, Vol. 000 (2018) No. 002, p. 174,176.
[4]. Dong Wenwen, Huang Huimin, Gao Lei, et al. Research on the design of dish porcelain bottle bracket. Science and Technology Information, Vol. 13 (2015)No. 003, p. 37-37.
[5]. Wang Huaixi. Ultrasonic inspection of cracks in insulating porcelain bottles of power stations. Nondestructive Testing, Vol. 023 (2001) No. 003, p. 122-123,125.