ISSN: 2664-9640

A deep learning method for identifying pests and diseases in apple leaf image

Linping Hu [1,*], Liansun Zeng[1] , Xiang Chen[2], Yishan Lai[1], Haoyi Li[1]

[1]College of Information Engineering, Shanghai Maritime University, Shanghai 201306, China.

[2]Shanghai Jiao Tong University, Shanghai 200240, China.

* 15151980283@163.com

Abstract

Aiming at the lack of strict scientific basis and the greater influence of subjective factors in the diagnosis of diseases and insect pests of apple leaf image by manual visual inspection, a set of diseases and insect pests recognition system of apple leaf image based on deep learning was proposed. First of all, the apple leaf image is preprocessed to remove occlusion, image fusion, image enhancement and other operations. Then, on the basis of ResNet101 network, attention mechanism is added to obtain an optimized Reduce-Resnet (R-ResNet) deep neural network model. In the training process of R-ResNet network, mean pooling and maximum pooling are combined and then a convolution kernel with a size of 5×5 and a padding of 3 is applied. After extracting the spatial information of the image, Sigmoid is output. Finally, a comparative experiment is conducted on the network structure before and after the improvement. The experimental results show that the identification method based on R-ResNet network model can improve the accuracy of 97.99% for identifying diseases and insect pests of apple leaves, and provide a method for intelligent diagnosis of agricultural diseases and insect pests.

Keywords

Plant Diseases And Insect Pests,Deep Learning, Resnet101, R-Resnet, Image Recognition.

1. Introduction

According to the statistics of the Food and Agriculture Organization of the United Nations, The sown area and output of crops in China account for 43% and 49% of the world respectively, ranking first in the world. In contrast, the average crop yield is not high, ranking first in the world on the premise that the planted area is also the world's first. However, the crop yield reduction caused by diseases and insect pests every year is also regrettable. Therefore, timely detection and management of diseases and insect pests, so as to improve the average crop yield, is a problem that relevant experts have been studying [1-2]. As a representative of crops, apples have large leaves, rich in vitamins, mineral elements and cellulose, with high nutritional value, and have become a consumer product in People's daily life. However, the occurrence of apple diseases and insect pests seriously affects the yield and quality of apple fruit, which makes farmers suffer huge economic losses. Apple black star disease is an important disease in all apple producing areas in the world, which seriously affects the quality, yield and storage of apples. In order to effectively control the occurrence of apple black star disease, the principle of prevention and treatment should be adhered to.

However, agricultural pest and disease images are structurally complex, time-consuming and laborious to adopt artificial recognition method, and difficult to obtain objective and accurate diagnosis. Therefore, many scholars have tried to use artificial intelligence technology to diagnose diseases and insect pests images, and have achieved certain research results:

ISSN: 2664-9640

Literature [3] constructed the image data set of peanut leaf disease, used CNN as the image recognition model of peanut leaf disease, conducted model pre-training using Lenet-5 under the framework of TensorFlow, and Inception v3 conducted secondary training to construct an image recognition model of peanut leaf disease. Literature [4] improved the performance of the Inception_v3 network and devised a method for whenet-CNN identification of impurities in wheat. The experimental results showed that when WheNet-CNN was used, the accuracy of identifying the impurities in the background of the wheat image was up to 98%. However, for some impurities with similar color, certain shade and overlapping impurities, the network is prone to errors in recognition.

In this paper, an image recognition system of apple leaf diseases and insect pests based on R-ResNet network model was proposed. ResNet101 deep neural network was selected as the basic network structure to realize the identification of healthy apple leaf image and black star apple leaf image through the improvement of network structure. Compared with the basic ResNet101 model recognition method, R-ResNet network model has better recognition effect.

2. System design

2.1. Apple leaf image recognition model

The pest and disease identification system for apple leaf image built in this paper is shown in Figure 1. The recognition system is mainly composed of three parts: data set preprocessing part, model training and feature extraction part based on deep learning strategy, and automatic recognition and classification part. In the identification and classification of apple leaf images, a series of pre-processing operations are required for the original data set, and then the pre-processed images are input into the network model for training and feature extraction. Finally, the extracted feature input sigmoid classifier is classified to realize the identification of diseases and insect pests of apple leaves.

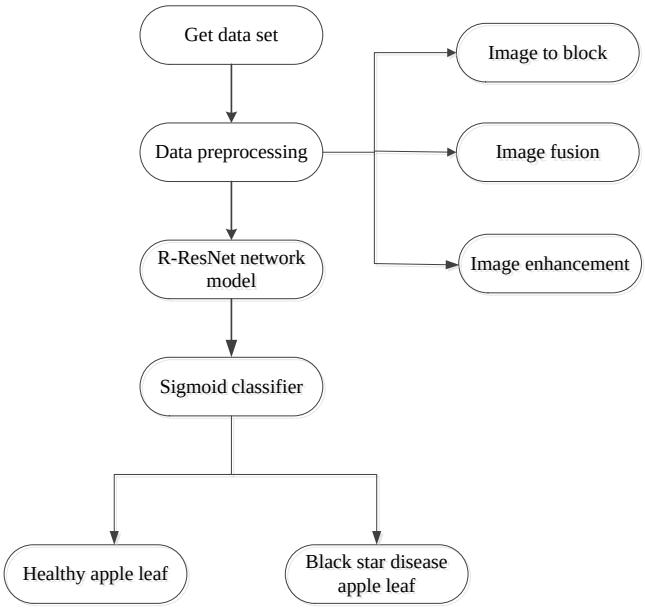

Figure 1: Image recognition model of apple leaf

2.2. Data set preprocessing

Due to the problems such as redundant background, noise pollution, small sample size, and uneven sample distribution, the original data set obtained will have very unsatisfactory effect if it is directly used for network model training. Therefore, in order to meet the requirements of the training model and improve the accuracy of the model, a series of preprocessing operations are required for the original data set. Pre-processing steps are as follows:

Image occlusion: The image occlusion method based on thermal diagram is used to remove the occlusion information, retain the whole leaf part in the image of diseases and pests, and remove most of the background part to ensure the image quality and reduce the image size [5].

Image fusion: Color space theory is combined with crop image recognition to reduce the influence of uneven lighting conditions and complex background noise [6-7].

Image enhancement: Through gray histogram equalization and adaptive histogram equalization processing of crop disease images, the distribution of gray and brightness of disease images is uniform [8].

3. R-ResNet model training and feature extraction

3.1. ResNet101 infrastructure

The identification network model R-ResNet proposed in this paper takes the ResNet101 network model as the basic network structure. ResNet101 network is composed of a 7×7 convolutional layer and a 3×3 maximum pooling layer. Compared with the 16-layer VGG network, the biggest feature of ResNet101 network is that it requires very few parameters and does not use the full connection layer that requires a large number of training parameters. Furthermore, ResNet solves the problem of gradient disappearance caused by network depth in neural networks [9].

As shown in formula (1), the loss function of the network is $F(X,W)$, and the gradient value of its back propagation is shown in formula (2). The loss function of the network is shown in Formula (3). Where, is the number of layers of the neural network. Finally, the gradient of the second layer can be deduced according to the chain rule, as shown in (4). Therefore, it can be seen that the gradient of the front layer network becomes smaller and smaller with the return of error.

$$Loss = F(X,W) \tag{1}$$

$$\frac{\sigma Loss}{\sigma X} = \frac{\sigma F(X,W)}{\sigma X} \tag{2}$$

$$Loss = F_n(X_n,W_n), L_n = F_{n-1}(X_{n-1},W_{n-1}), \ldots L_2 = F_1(X_1,W_1) \tag{3}$$

$$\frac{\sigma Loss}{\sigma X_i} = \frac{\sigma F_n(X_n,W_n)}{\sigma X_n} * \ldots * \frac{\sigma F(X_{i+1},W_{i+1})}{\sigma X_i} \tag{4}$$

ResNet explicitly allows layers in the network to fit the residual mapping by adding shortcut connections [10]. As shown in Figure (2), change the output layer from $H(X) = F(X)$ to $H(X) = F(X) + X$ .The output layer is changed from formula (4) to formula (5), so even if the network is deep, the gradient will not disappear.

$$\frac{\sigma X_{i+1}}{\sigma X_i} = \frac{\sigma X_i + \sigma F(X_i,W_i)}{\sigma X_i} = 1 + \frac{\sigma F(X_{i+1},W_{i+1})}{\sigma X_i} \tag{5}$$

In addition to the residual structure, ResNet also has a stacked residual structure. Each residual module is composed of multiple small-scale kernels. The whole ResNet is fully convoluted except for the full connection layer used for classification, which greatly improves the computing speed. The working principle of ResNet is shown in Figure (2).

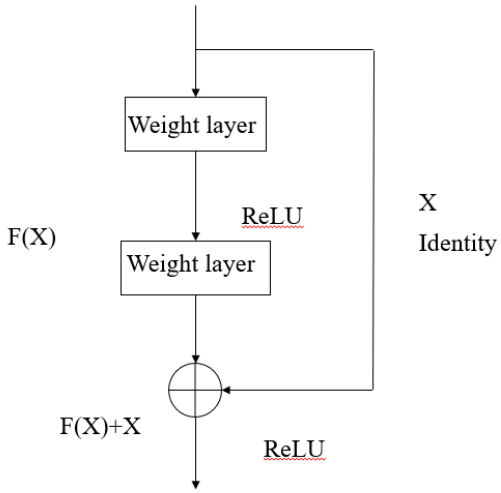

Figure 2: ResNet schematic diagram

3.2. ResNet101 improved structure

Based on the improved residual network, the pest and disease identification method of apple leaves can solve the problems of poor stability, large amount of computation and insufficient correlation of local features by using the local features between training samples and the same category, as well as the similarity between test samples and training samples.

First of all, on the basis of the original ResNet 101, the idea of full convolution structure is incorporated into the network, and the convolutional layer is used to replace the full connection layer to optimize the network. As shown in Figure (3), using convolutional layer instead of full connection layer can realize weight sharing in space and reduce the phenomenon of overfitting. After a global mean pooling and a global maximum pooling, the mean pooling and the maximum pooling are combined and then a convolution kernel with a size of 5×5 and a padding of 3 is applied. After the spatial information of the image is extracted, Sigmoid is output. Where, Scale refers to the completion of feature re-calibration in spatial dimension through multiplication and weighting to the previous feature channel.

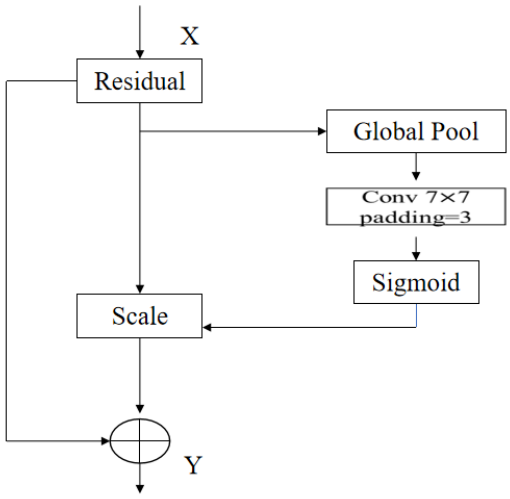

Figure 3: ResNet improvement schematic

Secondly, after the optimization of network joined the attention mechanism, the mechanism of attention for six floors, attention mechanism makes to attention mechanism model to find the input of the key part of building, especially in the aspect of fine-grained image classification, can find out with degree of differentiation, suitable for solving the problem of weak supervision and learning.

ISSN: 2664-9640

4. Experimental results and analysis

4.1. The data set

The article uses the data sets with health and scab apple leaf data set, the data set contains 300 jian-kang zhang apple leaf images and 200 pieces of apple leaf images with scab, artificial tag, data preprocessing, as shown in figure 4, figure 4 (a) on behalf of the health of apple leaf image, figure 4 (b) on behalf of the apple leaf images with scab.

(a) Image of healthy apple leaves (b) Image of apple leaves with black star disease

Figure 4:Sample apple leaf image

4.2. The experiment design

This experiment is based on the computer with Intel I5-9300HF CPU and NVIDIA GeForce GTX1660i graphics card. Pytorch is selected as the deep learning framework. Set a fixed clipping area to cut all image sizes to 224×224. At the same time, the data set is divided into two parts: training set and verification set, and the influence of the network structure on the classification accuracy is compared.

4.3. The evaluation index

In image classification task, the performance of classification model is generally evaluated from two aspects of classification accuracy rate and loss function value. In this paper, the loss function adopts the cross entropy loss function. For classification accuracy, let N_{total} represents the total number of apple leaf images in the test set, and N_{rec} represents the number of images correctly classified, and then the classification accuracy can be expressed as Formula (6) [11] :

$$R = \frac{N_{rec}}{N_{total}} \tag{6}$$

4.4. Results and analysis

In order to verify the influence of the improved network structure on the recognition rate, this group of experiments used the preprocessed data set to conduct experiments on two different network structures, R-ResNet and ResNet101 respectively.

Figure 5 (a) and (b) respectively show the experimental results of accuracy training for R-ResNet and ResNet101 two different network structures after preprocessing. The experimental results show that when the number of iterations is 40, the training accuracy and test accuracy of R-ResNet deep convolutional neural network are both higher than ResNet101 network. The

highest training accuracy rate reached 97.99%. And the model of R-RESnet network is easier to converge and the overall effect is better.

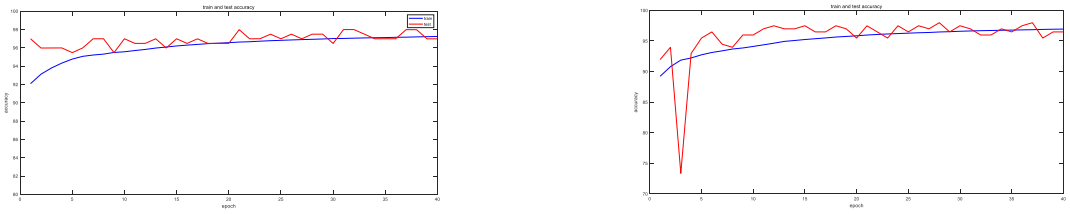

(a)R-ResNet (b) ResNet101

Figure 5:Acc curves forR-ResNet and ResNet101 training and testing

Figure 6 (a) and (b) respectively show the experimental results of loss rate training for R-ResNet and ResNet101 two different network structures after preprocessing. The experimental results show that when the number of iterations is 40, the training loss rate and test loss rate of R-ResNet deep convolutional neural network are both lower than ResNet101 network. The loss value of R-ResNet test is lower than 0.1, indicating that the network has learned features from the data set, and these features are helpful to classify the apple leaf image. Moreover, R-ResNet network model is easier to converge and the overall effect is better.

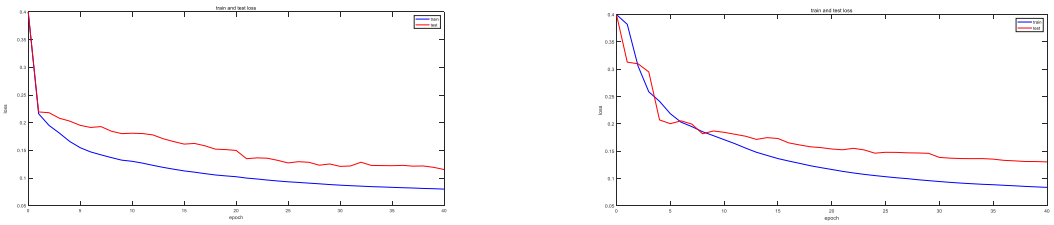

(a)ResNet101 (b) ResNet101

Figure 6 :Loss curves for R-ResNet and ResNet101 training and testing

5. Conclusion

In the prevention and treatment of apple black star disease, the principle of prevention first and treatment second should be adhered to, so as to effectively control the occurrence of the disease and reduce the harm. In this paper, the deep convolutional neural network was used to classify the apple leaf images, and then the diagnosis of apple black star disease was made. The ResNet101 network structure is redesigned to simplify the full connection layer, so as to reduce the training parameters and shorten the training time. The experimental results show that the classification recognition model proposed in this paper improves the recognition rate. In order to further improve the recognition rate and wide applicability of this model, the image preprocessing link will be further optimized in the follow-up research work, and the varieties of crops, diseases and insect pests will be expanded to improve the practical application value of this research.

References

[1] Gao Jing. Rice Precision Agriculture Information System based on Artificial Intelligence [D]. Harbin University of Science and Technology,2019.

[2] Dhingra G, Kumar V, Joshi HD (2017) Study of digital image processing techniques for leaf disease detection and classification. Multimed Tools Appl 77(15), p. 19951–20000.

[3] Zhang Shuo. Research and Implementation of Peanut intelligent Management Information System [D]. Shandong Agricultural University,2019.

[4] Shen Y , Yin Y , Zhao C , et al. Image Recognition Method Based on an Improved Convolutional Neural Network to Detect Impurities in Wheat[J]. IEEE Access, 2019, P(99):1-1.

[5] Wen Zhuo-man, You Qu-bo, DENG Xiao-long, LIU Xiang-de, Chen Ming. A method for constructing thermal diagram of aerial target threat [J]. Electronic information countermeasure technology, 2020, 35(05):69-73.

[6] Lin Qi-zhao, SUN Yong-ke, Qiu Jian. Wood texture detection technology based on YCbCr color space [J]. Journal of xinyang agricultural and forestry university,2020,30(03):100-103+112.

[7] Liu Yongbo, LEI Bo, HU Liang, TANG Jiangyun, Cao Yan, Yin Yalin. Study on classification of rice blast disease by machine vision in HSV color space [J]. Acta Agronomica Sinica,20,10(10):83-90.

[8] Wu ying. Adaptive image enhancement algorithm based on bihistogram equalization [J]. Computer engineering, 2011,37(04):244-245.

[9] Li Ai-lian, LIU Hao-nan, GUO Zhi-bin, XIE Shaofeng, CUI Gui-mei. Research on the status identification of slag out of steel under improved ResNet101 network [J]. China test,2020, 46(11): 116- 119+125.

[10] Garcia -Garcia A, Orts -Escolano S, Oprea S, et al. A surveyon deep learning techniques for image and video semantic segmentation[J].Applied Soft Computing, 2018, 70: 41 -65.

[11] P. Kamencay, R. Hudec, M. Benco and M. Zachariasova. Feature extraction for object recognition using PCA -KNN with application to medical image analysis[C]//2013 36th International Conference on Telecommunications and Signal Pro- cessing (TSP), Rome, 2013: 830-834.